RoHS

REV.	DESCRIPION	ECO NO.	UPDATE BY	DATE	APPROVED
A	DRAWING RELEASED	015730	ARKADY	30/07/19	RADU N.

675R

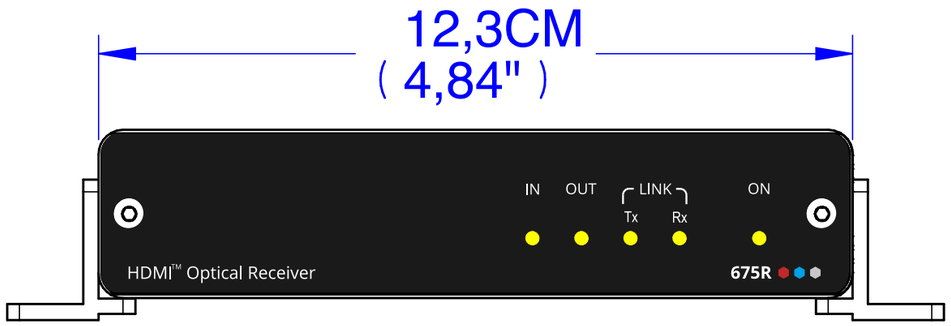

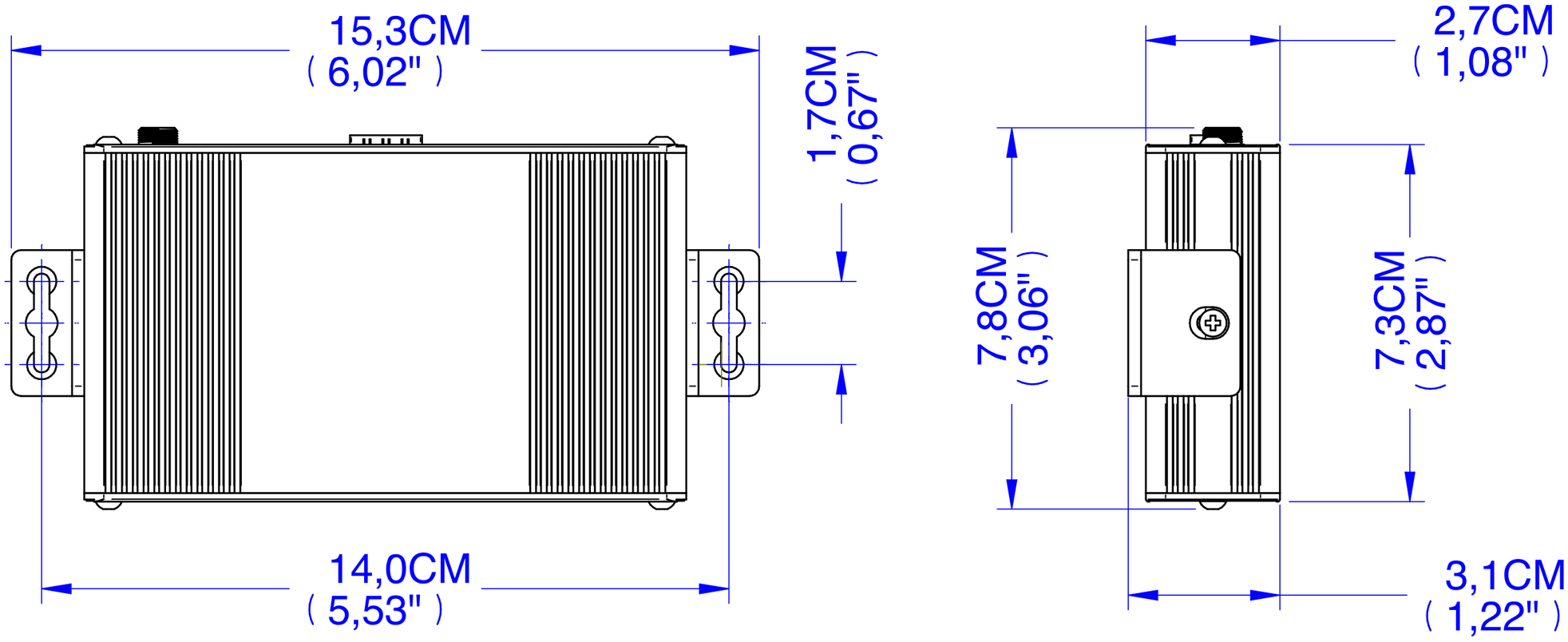

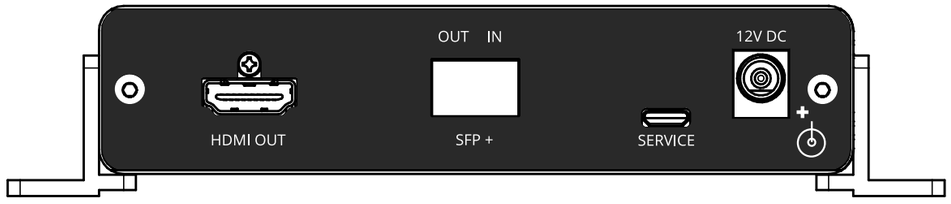

	NAME	DATE
DRAWN	ARKADY	30/07/19
APPROVED	RADU N.	30/07/19

KRAMER ELECTRONICS LTD.
JERUSALEM, ISRAEL

Project :
675R

KRAMER DRW.: OL000263

REV. A