ACC-DHK
ACC-DHP6

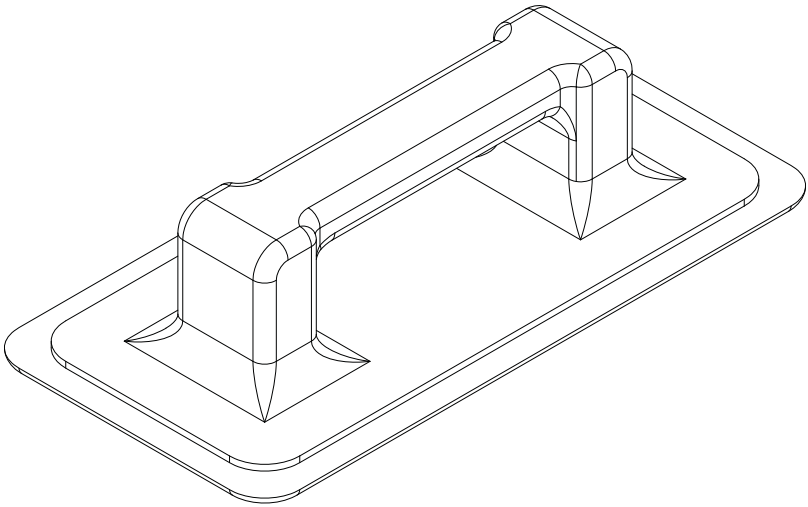

ENG
ESP
FRN
DEU
NEL
ITL
ČEŠ
SLK
POR
TÜR

2014-06-11 #:120-9194-1

ENG	Parts (Before beginning, make sure you have all parts shown below).
ESP	Piezas (antes de iniciar, asegúrese de tener todas las piezas siguientes).
FRN	Pièces (avant de commencer, assurez-vous d'avoir toutes les pièces illustrées ci-dessous).
DEU	Teile (Achten Sie vor Beginn der Arbeiten darauf, dass alle unten abgebildeten Teile vorhanden sind).
NEL	Onderdelen (hoort u zich ervan te overtuigen dat u alle onderdelen hebt, die hieronder te zien zijn).
ITL	Parti (prima di iniziare, accertarsi di disporre tutte le parti sotto indicate).
ČEŠ	Díly (předtím, než začnete, připravte si všechny díly zobrazené níže).
SLK	Diely (predtým, ako začnete, pripravte si všetky diely zobrazené nižšie).
POR	Peças (antes de iniciar, certifique-se de que tem todas as peças apresentadas em baixo).
TÜR	Parçalar (Başlamadan önce, aşağıda gösterilen bütün parçaların elinizde olduğundan emin olun).

Parts List			**ACC-DHK**		**ACC-DHP6**
	Description	**Qty**	**Part #**	**Qty**	**Part #**
A	hand trowel tool	2	600-0344	0	-
B	mop pad	4	600-0345	6	600-0345

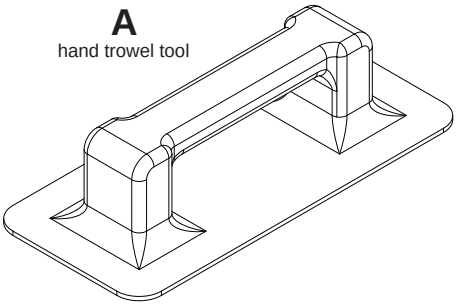

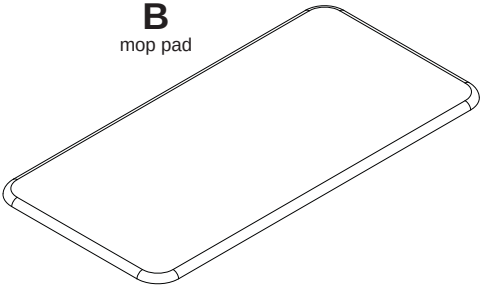

1

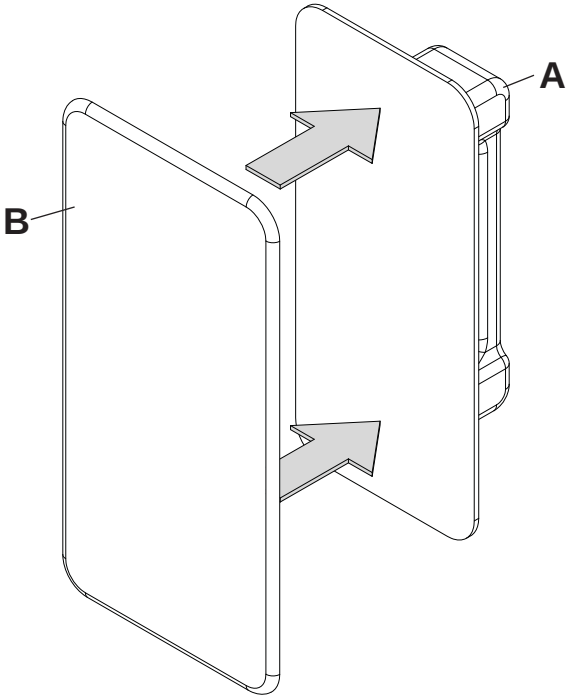

2-1

ENG
ESP
FRN
DEU
NEL
ITL
ČEŠ
SLK
POR
TÜR

Verify that pads (B) are free of any contaminants. Gently press on the front of the display with (2) pads spaced shoulder width apart to release mechanism.

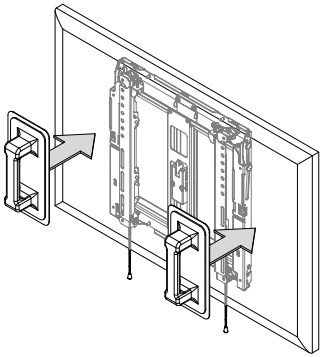

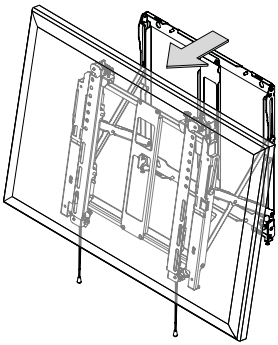

2-2

ENG
ESP
FRN
DEU
NEL
ITL
ČEŠ
SLK
POR
TÜR

Gently press on the front of the display with (2) pads spaced shoulder width apart until the mount is re-engaged.

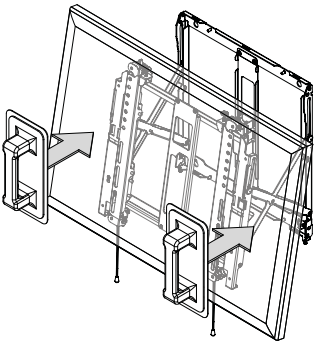

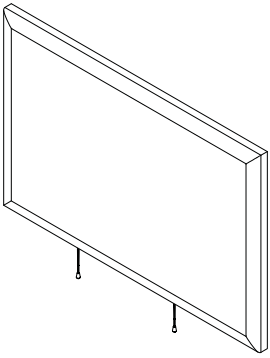

Peerless-AV
2300 White Oak Circle
Aurora, IL 60502
Email: tech@peerlessmounts.com
Ph: (800) 865-2112
Fax: (800) 359-6500
www.peerless-av.com

© 2014, Peerless Industries, Inc.

Peerless-AV Europe
Unit 3 Watford Interchange,
Colonial Way, Watford, Herts,
WD24 4WP, United Kingdom
Customer Care
44 (0) 1923 200 100
www.peerless-av.com

© 2014, Peerless Industries, Inc.

Peerless-AV de Mexico
Ave de las Industrias 413
Parque Industrial Escobedo
Escobedo N.L Mexico 66050
Servicio al Cliente
01-800-849-65-77
www.peerless-av.com

© 2014, Peerless Industries, Inc.