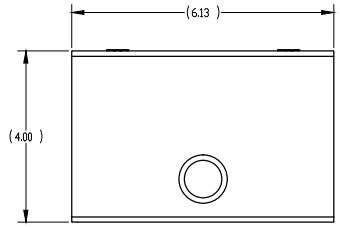

SIDE VIEW

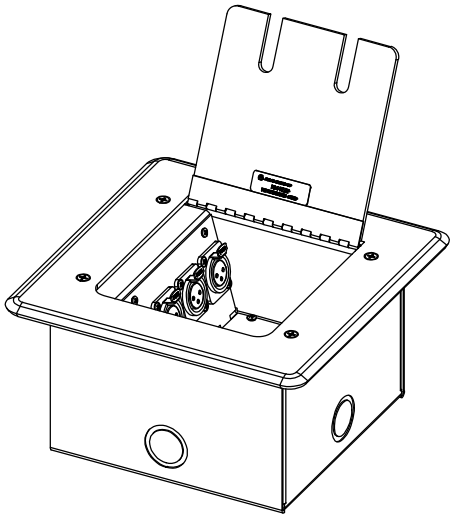

TRIMETRIC VIEW

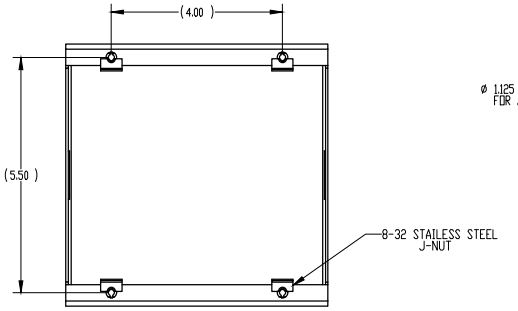

TOP VIEW

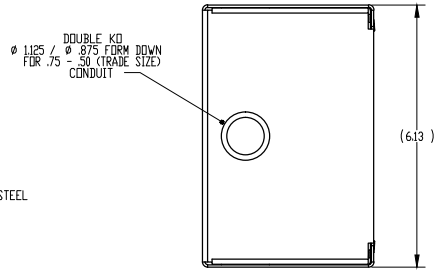

SIDE VIEW

PROPRIETARY AND CONFIDENTIAL.
THE INFORMATION CONTAINED IN THIS
DRAWING IS THE SOLE PROPERTY OF
ATLAS SOUND.
REPRODUCTION IN PART OR AS A WHOLE
WITHOUT THE WRITTEN PERMISSION OF
ATLAS SOUND IS
PROHIBITED.

MODEL: FB4CPB

SCALE: 1:1.5

SIZE: C