Gefen tv®

4x1 HD Switcher w/ Audio Decoding

GTV-AUDDEC-N

User Manual

gefentv.com

ASKING FOR ASSISTANCE

Technical Support:
Telephone (818) 772-9100
(800) 545-6900

Fax (818) 772-9120

Technical Support Hours:
8:00 AM to 5:00 PM Monday through Friday, Pacific Time

Write To:

Gefen, LLC
c/o Customer Service
20600 Nordhoff St
Chatsworth, CA 91311

gefentv@gefen.com
www.gefentv.com

Notice

Gefen, LLC reserves the right to make changes in the hardware, packaging, and any accompanying documentation without prior written notice.

4x1 HD Switcher w/ Audio Decoding is a trademark of Gefen, LLC

HDMI, the **HDMI** logo, and **High-Definition Multimedia Interface** are trademarks or registered trademarks of HDMI Licensing in the United States and other countries.

Manufactured under license from Dolby Laboratories.
Dolby, Pro Logic, and the double-D symbol
are registered trademarks of Dolby Laboratories.

© 2011 Gefen, LLC. All rights reserved.
All trademarks are the property of their respective owners.

Rev A3

CONTENTS

1 Introduction
2 Operation Notes
3 Features
4 Front Panel Layout
5 Front Panel Descriptions
6 Back Panel Layout
7 Back Panel Descriptions
8 IR Remote Layout and Descriptions
10 IR Remote Installation
11 IR Remote Configuration
12 Connecting the 4x1 HD Switcher w/ Audio Decoding
12 Wiring Diagram
13 Operating the 4x1 HD Switcher w/ Audio Decoding
13 Status Screen
13 Standby Mode and Power the Switcher
15 Adjusting the Volume
16 Changing the Audio Processing Mode
16 Accessing the Menu System
17 Menu System
17 Setting the Speaker Size
19 Setting the Speaker Level
21 Setting the Speaker Distance
23 Adjusting the Tone Control
25 Saving Audio Processing Favorites
30 Dynamic Range Compression
32 Audio Enhancement Modes
34 Setting the Unit of Measure
36 Setting the EDID Mode
38 Setting the IR Channel
40 Resetting the Switcher to Factory Settings
42 RS-232 Serial Control
43 RS-232 Serial Commands
69 Menu System Summary
69 Main Menu
71 Speaker Size Menu
72 Speaker Level Menu
74 Speaker Distance Menu
76 Tone Control Menu
77 Audio Setup Menu
79 Misc Setup Menu
81 Specifications
82 Warranty

INTRODUCTION

Congratulations on your purchase of the 4x1 HD Switcher w/ Audio Decoding. Your complete satisfaction is very important to us.

Gefen TV

Gefen TV is a unique product line catering to the growing needs for innovative home theater solutions. We specialize in total integration for your home theater, while also focusing on going above and beyond customer expectations to ensure you get the most from your hardware. We invite you to explore our distinct product line and hope that you find your solutions. Don't see what you are looking for here? Please call us so we can better assist you with your particular needs.

The Gefen TV 4x1 HD Switcher w/ Audio Decoding

The GefenTV 4x1 HD Switcher w/ Audio Decoding is ideal for anyone wanting to create Home Cinema systems using multiple HDMI audio/video sources. It offers an easy-to-use alternative to over-complicated Home Theater Receivers, while supporting 3DTV andthe latest Blu-ray audio features, or it can add HDMI connections and audio decoding to existing A/V Receivers that lack HDMI support. It decodes multi-channel surround-sound formatted digital audio from up to four HDMI sources, from coax and optical S/PDIF digital audio sources, plus a stereo analog input. Audio is output on six discrete analog RCA jacks, ready for any 5.1 channel power amplifier, or connects to the "External Processor" input on most existing A/V receivers. Dolby Digital 5.1, Dolby Pro Logic II, LPCM direct stereo and multi-channel surround-sound audio formats are supported with up to six (5.1) discrete channels. The front left and front right channels feature dual outputs for bi-amplification. Advanced audio pre-processing insures an optimal surround sound signal, and a bright LCD display guides operations. RS-232 control allows connection to remote control or home automation systems, such as Gefen's new GAVA automation system and Gefen PACS, with full feedback.

How It Works

Users can select audio from any one of four connected Hi-Def sources, both digital audio inputs and 2-channel analog audio. A Blu-ray player, gaming console, set-top box, DVD player, CD player and more can all be connected at the same time. If an HDMI source is selected, video is delivered in Hi-Def format to any HDTV display, and audio is delivered as 5.1 channel audio using standard RCA connectors. The HDMI output supports pass-through 3DTV making it ideal for future-proofing systems. Users can also pass-through audio using the digital and/or analog audio inputs, delivering it as up to 5.1-channel audio, enabling high quality surround-sound. When an audio input is selected, the video from the previously-selected video source is still output to the HDMI output, allowing users to watch a video source while listening to a different audio source. Users control all audio features using the IR remote or by front-panel buttons. An RS-232 port and 12V triggers allow interaction with any home automation system for added convenience.

READ THESE NOTES BEFORE INSTALLING OR OPERATING THE 4X1 HD SWITCHER W/ AUDIO DECODING

- The Digital Audio Decoder for HDMI has 8 RCA outputs. A maximum of 6 discrete channels of audio can be output via these connectors. 2 connectors are available for bi-amping the front left and right channels.
- This product was intended for use with a separate audio amplifier. The RCA output connectors on the rear panel will require the use of an audio amplifier to produce adequate volume output.
- This unit will support the following audio formats:

  LPCM (up to 6 channels)
  Dolby Digital (AC-3 up to 6 channels)
  Dolby Pro Logic
  Dolby Pro Logic II

- This unit features multiple EDID (display information) modes which will determine what audio formats can be used. For more information please see page 36.
- This unit will accept sources that use Deep Color.

FEATURES

Features

- Supports resolutions up to 1080p and 1920 x 1200
- Switch between four HDMI sources and a single HDTV display
- Supports Dolby Digital 5.1 (AC3), Dolby Pro Logic II, LPCM HDMI direct (up to 6 channels)
- Extracts encoded digital audio from HDMI, TOSLINK, or S/PDIF inputs
- Front Panel push-button controls
- RS-232 control
- IR Remote control
- 12 V trigger input for power amplifiers (turns unit on when 12V is received)
- 12 V, 50 mA trigger output (output is 12V when unit is on, 0V when unit is off)
- Save and recall user settings for each input
- Line level volume control
- Standby Mode
- Enclosure provides excellent heat dissipation and quiet operation

Package Includes

(1) 4x1 HD Switcher w/ Audio Decoding
(1) 6 ft. HDMI cable (M-M)
(1) IR remote control
(1) 24V DC power supply
(1) AC power cord
(1) User manual

Front Panel

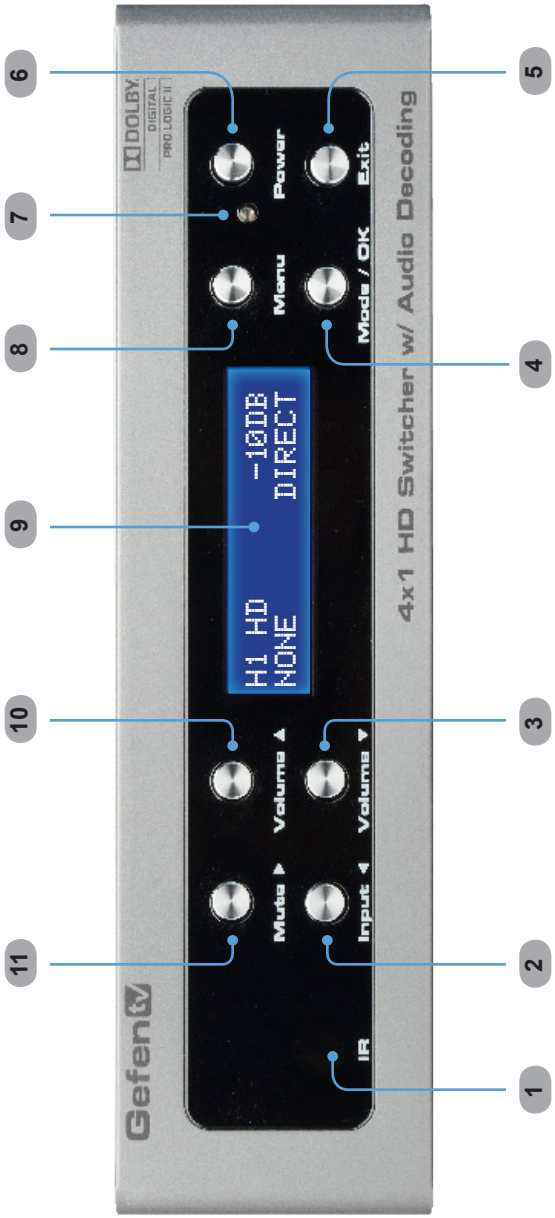
6
5
7
8
4
9
10
3
11
2
1
DOLBY
DIGITAL
PRO LOGIC II
Power
Exit
Menu
Mode / OK
-10DB
DIRECT
H1 HD
NONE
4x1 HD Switcher w/ Audio Decoding
Mute
Volume
Input
Volume
IR
Gefen

FRONT PANEL DESCRIPTIONS

1 IR

This IR receiver will accept commands from the included IR Remote Control Unit.

2 Input ◄

This button cycles through all video and audio inputs. For each video input, audio may be selected from the embedded HDMI audio, or the coax, optical, or L/R analog audio inputs.

3 Volume ▼

This button is used to decrease the volume level of the audio outputs when not in the Menu System. While in the Menu System this button will cycle down through the current level's options.

4 Mode / OK

This button will change the audio processing mode. This button serves as a confirmation button when using the Menu System.

5 Exit

This button is used to exit the current menu level and return to the previous/ parent level. This button will exit the entire Menu System when on the top most level.

6 Power

Press this button to power ON the Switcher or place it in Standby mode.

7 Power Indicator

This LED will indicate the current power state. When the LED is red, the unit is in standby mode. When the LED is green, the unit is on.

8 Menu

This button will activate the Menu System which is where all adjustment and settings will be made.

9 Main LCD Display

This display will show pertinent status information and will be used to make adjustments to features in the Menu System.

10 Volume ▲

This button is used to increase the volume level of the audio outputs when not in the Menu System. While in the Menu System this button will cycle up through the current level's options.

11 Mute ►

This button will cycles between Mute-On and Mute-Off modes. When the Mute-On mode is enabled, all audio output will be ceased. While in the Menu System this button will cycle through available options in the right direction when a feature has been selected for adjustment.

BACK PANEL LAYOUT

Back Panel

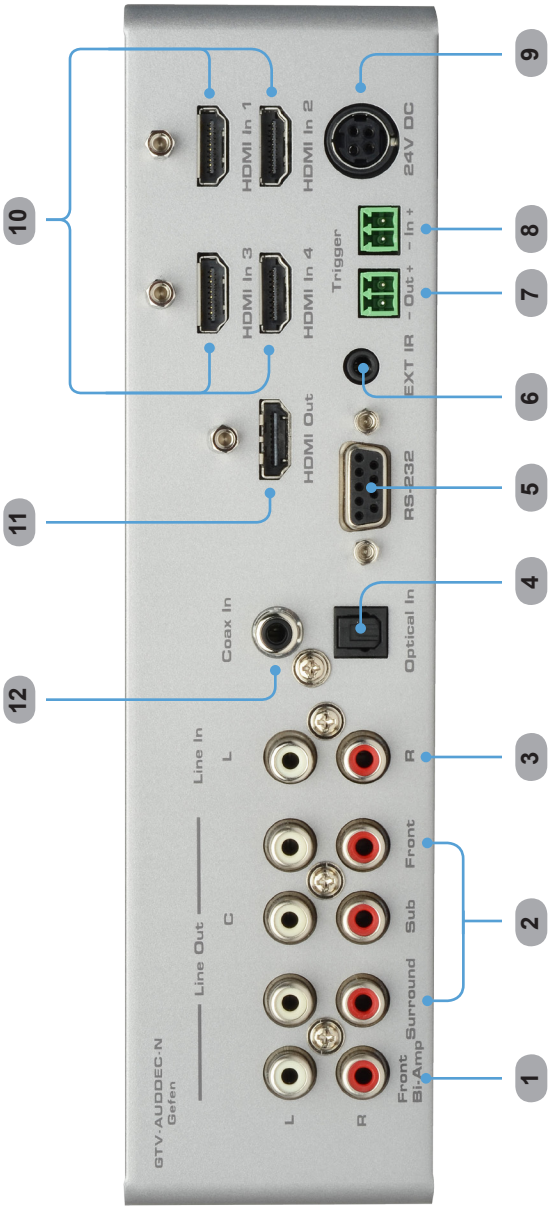

BACK PANEL DESCRIPTIONS

1 Line Out (Front Bi-Amp)
Two RCA audio output connectors available for front-channel bi-amping purposes. The output signal is identical to the Front L/R outputs.

2 Line Out (Surround, Sub, Front)
8 RCA-type audio outputs are available for connection to a separate amplifier. Up to 6 discrete channels can be utilized.

3 Line In
L/R RCA-type audio inputs for analog audio.

4 Optical In
Use an optical cable to connect an external digital audio source to this TOSLINK connector.

5 RS-232
This port is used to control functions and features using serial communications. For more information on this feature please see page 42.

6 Ext IR
Connect an IR extender (Gefen Part No. EXT-RMT-EXTIR) to this port to extend the IR range if this product.

7 Trigger Out
Provides 11.5 V DC when the Switch is powered ON. This trigger can be used to control an external power amplifier, lights, curtains, etc.

8 Trigger In
Used to externally power the unit ON or OFF. This trigger will power ON the Switcher when a 3 V - 12 V DC voltage is applied. If the existing voltage is removed, then the Switcher is placed in Standby Mode (consumes less than < 1 W).

9 24V DC
Connect the included 24 V DC power supply to this power receptacle. Only use the power supply that is included with this product.

10 HDMI In (1 - 4)
Use these ports to connect and switch between four HDMI devices.

11 HDMI Out
Connect an HDMI output device to this port.

12 Coax In
Use a coax audio cable to connect an external digital audio source to this S/PDIF connector.

GTV-AUD-NIR IR Remote Control Unit

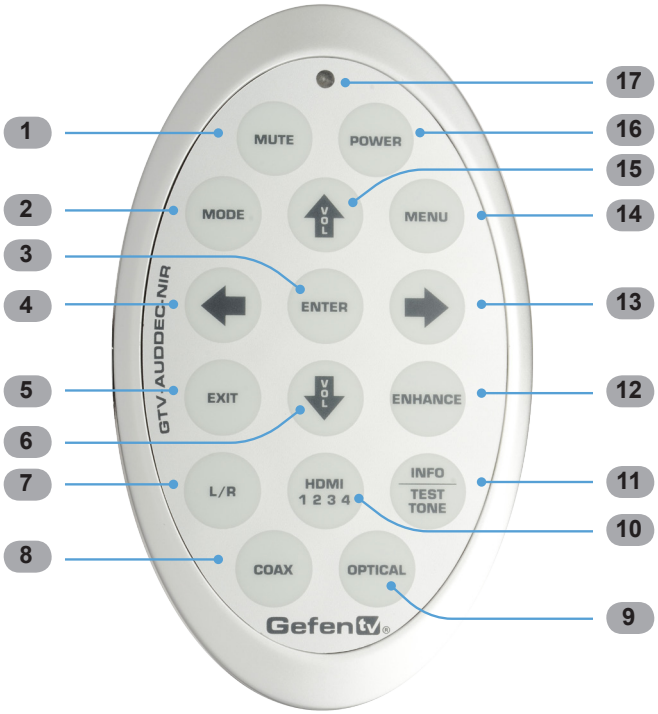

1 Mute

This button cycle between mute on and mute off modes. When mute is applied there will not be any audio output.

2 Mode

This button functions the same as the Mode button on the front panel.

3 Enter

Confirms the current selection setting.

4 ◄ (Cursor Left)

This button will navigate left when using the Menu System.

5 Exit

This button functions the same as the Exit button on the front panel.

6 ▼ (Cursor Down / Decrease Volume)

This button will navigate down through options when using the Menu System and will increase the volume when not in the Menu System.

7 L/R

Press this button to select the analog L/R audio input source. The current video source will not change.

8 Coax
Press this button to select the S/PDIF audio input source. The current video source will not change.

9 Optical
Press this button to select the S/PDIF audio input source. The current video source will not change.

10 HDMI 1234
Press this button cycle between each of the HDMI input sources. The audio output will follow the HDMI source.

11 Info / Test Tone
This button will display a series of information messages on the LCD screen when pressed. When adjusting the Speaker Level, this button will activate a test tone that is useful for adjusting the volume level of each speaker.

12 Enhance
This button will cycle through audio enhancement presets. See page 32 for details on the available presets.

13 ► (Cursor Right)
This button will navigate right when using the Menu System.

14 Menu
This button will activate the Menu System which is where all adjustment and settings will be made.

15 ▲ (Cursor Up / Increase Volume)
This button is used to increase the volume level of the audio outputs when not in the Menu System. While in the Menu System this button will cycle up through the current level options.

16 Power
This button will toggle between the ON and STANDBY power states. An LED status indicator will signify the current power state. A RED LED will be active when the unit is in Standby power state. A GREEN LED will be active when the unit is in the ON power state.

17 Activity Indicator
This LED will be activated momentarily each time a button is pressed.

NOTE: An Activity Indicator that flashes quickly while holding down any one of the 16 buttons indicates a low battery. Replace the IR Remote Control battery as soon as possible.

Installing the Battery

1. Remove the battery cover on the back of the IR Remote Control Unit.
2. Insert the included battery into the open battery slot. The positive (+) side of the battery should be facing up.
3. Replace the battery cover.

The Remote Control unit ships with two batteries. One battery is required for operation and the other battery is a spare.

Battery Slot
(shown with battery)

WARNING: Risk of explosion if battery is replaced by an incorrect type. Dispose of used batteries according to the instructions.

How to Resolve IR Code Conflicts

In the event that IR commands from other remote controls interfere with the supplied IR Remote Control unit, changing the IR Remote Control's IR channel will fix the problem. The IR Remote Control unit has a bank of DIP switches used for setting the IR channel. The DIP switch bank is located underneath the battery cover.

Left: Picture of the opened rear battery compartment of the IR remote showing the exposed DIP Switch bank between the battery chambers.

Corresponding DIP Switch Settings for each IR Channel

IR Channel 0 (default)

IR Channel 1

IR Channel 2

IR Channel 3

It is important that the IR channel on the Remote Control unit, matches the IR channel set on the 4x1 HD Switcher w/ Audio Decoding. For example, if both DIP switches on the IR Remote Control unit are set to IR channel 0 (both DIP switches down), then the 4x1 HD Switcher w/ Audio Decoding must also be set to IR channel 0. See page 38 on how to change the IR channel on the 4x1 HD Switcher w/ Audio Decoding.

CONNECTING THE
4X1 HD SWITCHER W/ AUDIO DECODING

How to Connect the 4x1 HD Switcher w/ Audio Decoding

1. Connect up to four HDMI source devices to the HDMI input ports of the 4x1 HD Switcher w/ Audio Decoding using the included HDMI cables.

2. Optionally, connect additional audio sources to the Switcher using Optical, Coaxial, and L/R RCA cables.

3. Connect the Digital Audio Decoder to an amplifier using the RCA connectors on the rear panel. The following RCA connectors are available:

    - Front Left
    - Front Left (for bi-amping)
    - Front RIght
    - Front Right (for bi-amping)
    - Center
    - Left Surround
    - Right Surround
    - Subwoofer

4. Connect an HDMI output device to the HDMI output using an HDMI cable.

5. Connect the included 24 V DC power supply to the power receptacle on the Switcher. Connect the AC power cord to an available electrical outlet.

Wiring Diagram for the 4x1 HD Switcher w/ Audio Decoding

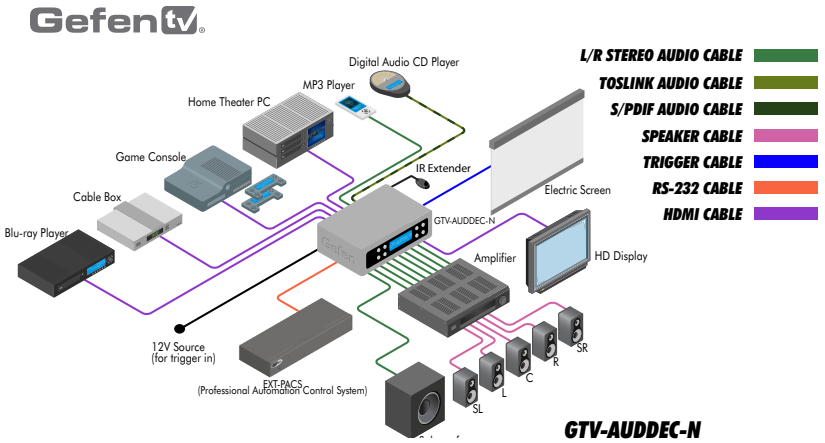

ATTENTION: This product should always be connected to a grounded electrical socket.

Status Screen

The Status Screen displays information regarding the current settings of the Switcher. The Status Screen is also used in conjunction with navigating the built-in Menu System.

After powering on the Switcher, the Standby Screen will be displayed. The Standby Screen indicates the currently selected A/V input, the current volume setting, the audio input format, and the audio processing mode:

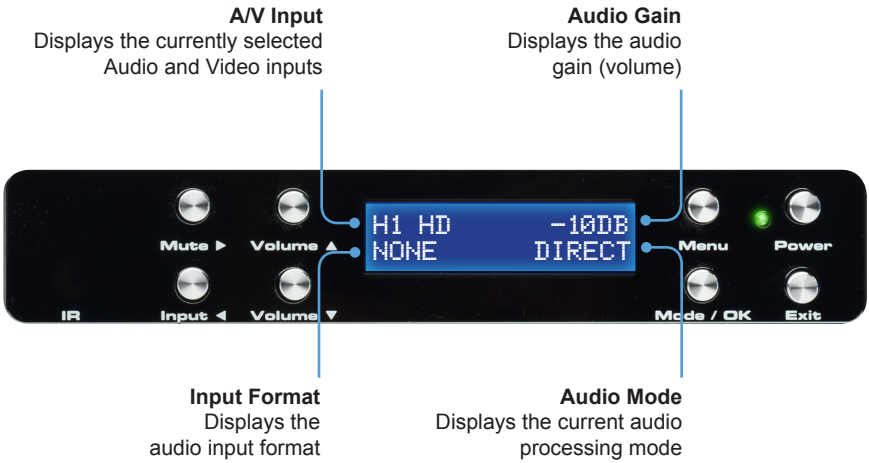

Standby Mode and Powering the Switcher

Once the power supply is connected and the AC power cord is connected to an available electrical outlet, the Power Indicator will glow bright red. When the Power Indicator is red, the Switcher is Standby Mode.

To power-on the Switcher, press the **Power** button on the front panel or use the **Power** button on the IR Remote Control. The power indicator, next to the Power button, will glow bright green.

Selecting the Input Source

Press the **Input ◄** button to cycle through each input source. The table below lists which inputs are active for each selection.

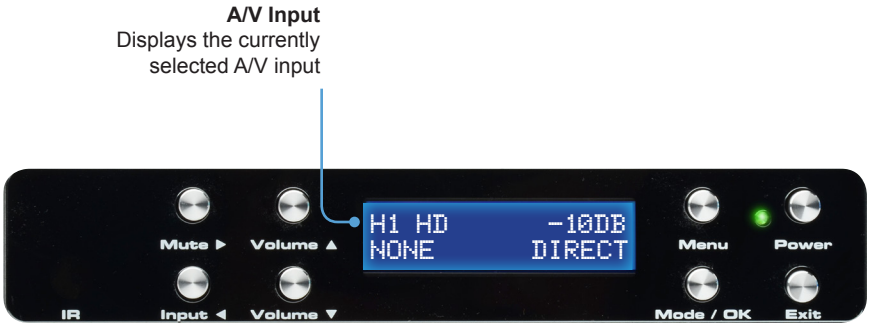

This Switcher has four HDMI inputs (1 - 4) and three options for audio (coax, optical, and analog stereo). The following table lists the available video and audio inputs.

Display	Video	Audio	Display	Video	Audio
H1_HD	HDMI In 1	HDMI	H3_HD	HDMI In 3	HDMI
H1_CX		Coax	H3_CX		Coax
H1_OT		Optical	H3_OT		Optical
H1_LR		Analog L/R	H3_LR		Analog L/R
H2_HD	HDMI In 2	HDMI	H4_HD	HDMI In 4	HDMI
H2_CX		Coax	H4_CX		Coax
H2_OT		Optical	H4_OT		Optical
H2_LR		Analog L/R	H4_LR		Analog L/R

The currently displayed A/V input is abbreviated in the Status Screen, using the following form:

[HDMI Input_Audio Source], where:

H1, H2, H3, and H4 is an HDMI input on the back panel of the Switcher.

And CX = Coax (S/PDIF), and OT = Optical (TOSLink) are audio inputs on the back panel of the Switcher. The HD suffix means that the embedded HDMI audio is being used.

Adjusting the Volume

Use the **Volume ▲** and **Volume ▼** buttons to increase or decrease the audio output gain. The ▲ or ▼ buttons on the IR Remote Control can also be used to control the audio output gain. Audio gain can be reduced to a minimum of -60 dB and to a maximum of +10 dB. Each time these buttons are pressed, the volume is increased or decreased by 1 dB.

TIP: To increase or decrease the audio gain at a faster rate, press and hold down either the Volume ▲ or Volume ▼ button until the desired volume is achieved.

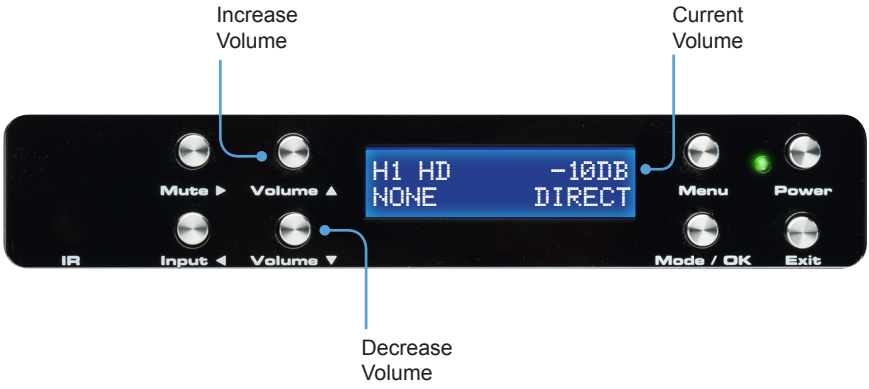

Muting the Audio Output

Use the **Mute** button on the front panel or on the IR Remote Control to mute the audio output. The display will indicate if the audio is muted. To disable the mute function, press the Mute button again. The **Volume ▲** and **Volume ▼** buttons can also be used to *disable* muting.

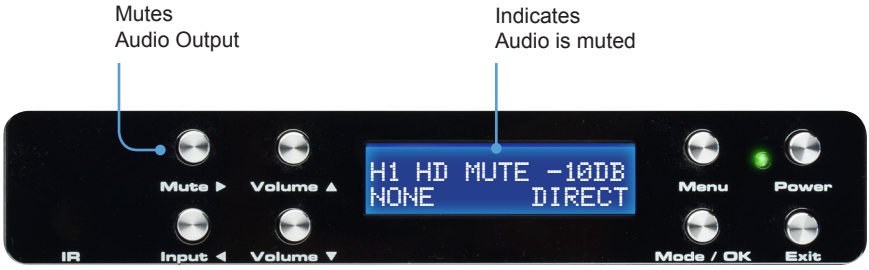

Changing the Audio Processing Mode

Successively press the **Mode / OK** button on the front panel to cycle through the different audio processing modes. The Mode button on the IR Remote Control can also be used to cycle through the audio modes.

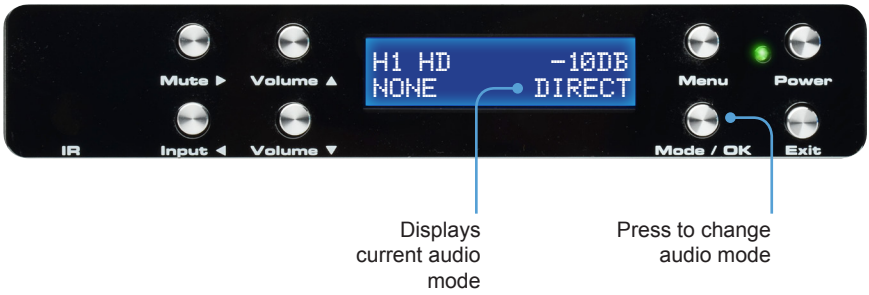

See page 25 for a description of each of the available audio processing modes.

Main Menu

To access the Menu System, press the Menu button on the front panel. The front-panel display will change:

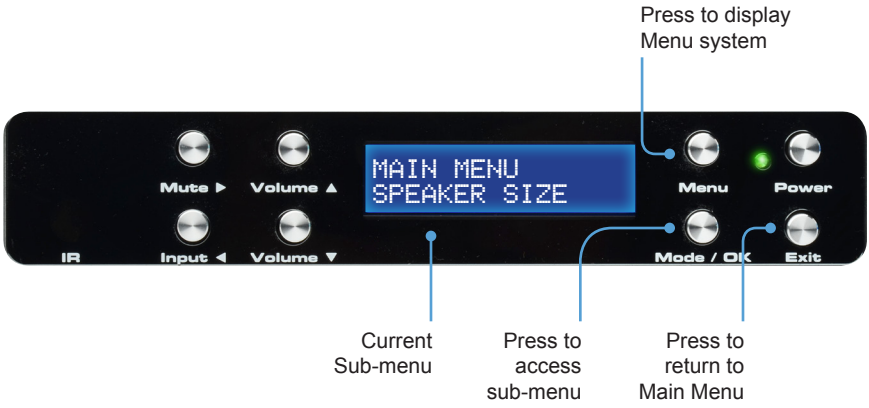

Press the **Volume ▲** or **Volume ▼** button to cycle through the different sub-menus. Press the **Mode / OK** button to access the currently displayed sub-menu. Press the Exit button to return to the Main Menu.

Using the Menu System

The 4x1 HD Switcher w/ Audio Decoding comes with a built-in menu system which provides control over additional audio features. The following examples demonstrate some of the more common features of the Switcher.

Setting the Speaker Size

Adjusting the speaker size determines how each speaker handles low frequency bands. All speakers except the front left and right channels have an option to disable the use of that channel. If the center, read surround, or subwoofer channels are not going to be used there speakers should be set to the OFF setting. Source audio that uses these channels will be properly mixed to the other available speakers. A full summary of the Menu System can be found starting on page 69.

Using the front-panel buttons

1. Press the **Menu** button. The front-panel display will change to display the Speaker Size menu:

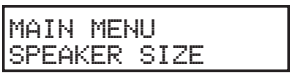

2. Press the **Mode / OK** button. The front-panel display will show the Front Left / Front R speaker size:

3. Press the **Mute** ► or **Input** ◄ button to change the speaker size.

4. Use the **Volume** ▲ or **Volume** ▼ buttons to change the size of the Center, Surround Left / Surround Right, and Subwoofer speakers.

5. Press the **Exit** button to save the changes and return to the Speaker Size menu.

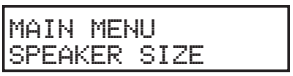

Using the IR Remote Control

1. Press the **MENU** button. The front-panel display will change to display the Speaker Size menu:

```
MAIN MENU
SPEAKER SIZE
```

2. Press the **ENTER** button. The front-panel display will show the Front Left / Front R speaker size:

```
SPEAKER SIZE
FRONT L/R(LARGE)
```

3. Press the ◄ or ► buttons to change the speaker size.

```
SPEAKER SIZE
FRONT L/R(SMALL)
```

4. Use the ▲ or ▼ buttons to change the size of the Center, Surround Left / Surround Right, and Subwoofer speakers.

5. Press the **EXIT** button to save the changes and return to the Speaker Size menu.

```
MAIN MENU
SPEAKER SIZE
```

Setting the Speaker Level

Modifying the Speaker Level increases or decreases the audio output gain of a specific speaker. This feature is useful for equalizing the sound at the listening position. By default, each speaker's output is set to 0 dB. The output can be adjusted by 1 dB increments between -10 dB and +10 dB.

Using the front-panel buttons

1. From the Standby Screen, press the Menu button. Use the **Volume ▲** or **Volume ▼** buttons to navigate to the Speaker Level menu:

2. Press the **Mode / OK** button. The front-panel display will show the Front Left speaker level:

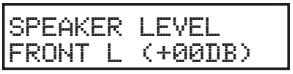

3. Press the **Mute ►** or **Input ◄** button to change the output gain of the Front Left speaker.

4. Use the **Volume ▲** or **Volume ▼** buttons to cycle through the Center, Front Right, Surround Right, Surround Left, and Subwoofer and adjust the output gain of each speaker as necessary.

5. Press the **Exit** button to save the changes and return to the Speaker Level menu.

Using the IR Remote Control

When using the IR Remote Control, the **INFO | TEST TONE** button can be used to produce a White Noise test tone in order to adjust the output level. The test tone can also be enabled / disabled via RS-232 (see page 65).

1. Press the **MENU** button. The front-panel display will change to display the Speaker Level menu:

```
MAIN MENU
SPEAKER LEVEL
```

2. Press the **ENTER** button. The front-panel display will show the Front Left speaker level:

```
SPEAKER LEVEL
FRONT L (+00DB)
```

3. Press the **INFO | TEST TONE** button on the IR Remote Control to enable the White Noise test tone.

4. Press the ◄ or ► buttons to adjust the output gain of the Front Left speaker.

```
SPEAKER LEVEL
FRONT L (+02DB)
```

   Once the desired output level has been set, press the **INFO | TEST TONE** button on the IR Remote Control to enable the test tone.

5. Use the ▲ or ▼ buttons to cycle through the Center, Front Right, Surround Right, Surround Left, and Subwoofer and adjust the output gain of each speaker as necessary.

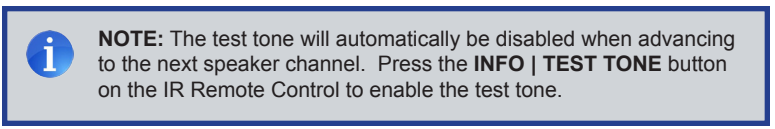

6. Press the **EXIT** button to save the changes and return to the Speaker Level menu.

```
MAIN MENU
SPEAKER LEVEL
```

Setting the Speaker Distance

Changing the speaker distance is necessary for providing the proper audio delay when using the various audio processing modes. The distance for each speaker can be set in 1.5 foot (0.5 meter) increments within a range of 0 feet - 33 feet (10 meters).

Speaker distance can be viewed in feet or meters. See page 34 for information on changing the preferred unit of measure on the Switcher.

Using the front-panel buttons

1. From the Standby Screen, press the Menu button. Use the **Volume ▲** or **Volume ▼** buttons to navigate to the Speaker Distance menu:

```
MAIN MENU
SPEAKER DISTANCE
```

2. Press the **Mode / OK** button. The front-panel display will show the current distance for the Front Left speaker:

```
SPEAKER DISTANCE
FRONT L (03.0M )
```

3. Press the **Mute ►** or **Input ◄** button to change the distance of the Front Left speaker.

```
SPEAKER DISTANCE
FRONT L (04.5M )
```

4. Use the **Volume ▲** or **Volume ▼** buttons to cycle through the Center, Front Right, Surround Right, Surround Left, and Subwoofer and adjust the speaker distance as necessary.

5. Press the **Exit** button to save the changes and return to the Speaker Level menu.

```
MAIN MENU
SPEAKER DISTANCE
```

Using the IR Remote Control

1. From the Standby Screen, press the **MENU** button. Use the ▲ or ▼ buttons to navigate to the Speaker Distance menu:

2. Press the **ENTER** button. The front-panel display will show the current distance for the Front Left speaker:

3. Press the ◄ or ► buttons to change the distance of the Front Left speaker.

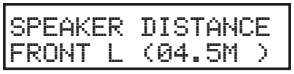

4. Use the ▲ or ▼ buttons to cycle through the Center, Front Right, Surround Right, Surround Left, and Subwoofer and adjust the speaker distance as necessary.

5. Press the **EXIT** button to save the changes and return to the Speaker Level menu.

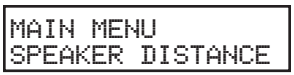

Adjusting the Tone Control

The Tone Control menu allows the adjustment of the treble and bass on the output signal. Treble and bass can be increased or decreased in 1 dB intervals, within a range of -12 dB to +12 dB.

Using the front-panel buttons

1. From the Standby Screen, press the **Menu** button. Use the **Volume ▲** or **Volume ▼** buttons to navigate to the Tone Control menu:

2. Press the **Mode / OK** button. The front-panel display will show the current bass setting.

3. Press the **Mute ►** or **Input ◄** button to change the bass setting.

4. Use the **Volume ▲** or **Volume ▼** buttons to navigate to the Treble setting and adjust the level as necessary.

5. Press the **Exit** button to save the changes and return to the Tone Control menu.

Using the IR Remote Control

1. From the Standby Screen, press the **MENU** button. Use the ▲ or ▼ buttons to navigate to the Tone Control menu:

2. Press the **ENTER** button. The front-panel display will show the current bass setting.

3. Press the ◄ or ► button to change the bass setting.

4. Use the ▲ or ▼ buttons to navigate to the Treble setting and adjust the level as necessary.

5. Press the **EXIT** button to save the changes and return to the Tone Control menu.

Saving Audio Processing Favorites

The 4x1 Switcher w/ Audio Decoding, allows any of five audio processing modes to be associated with a selected input.

For example, you may want to associate the Multichannel Stereo audio processing mode with the optical (TOSLINK) input. On the other hand, you may want to set the Dolby Pro Logic II (PLII) audio processing mode when using the analog L/R inputs, in order to create discrete multichannel audio when using a surround system. These two examples will be illustrated.

Available Modes

Mode	Description
DIRECT	Audio playback without any processing (default setting). The input signal is the same as the output signal.
STEREO	Multichannel audio is down-mixed to two-channel audio and routed to the Front Left / Front Right speakers.
MCH STER	Mixes the SL and FL channels to the Front Left Speaker; Mixes the SR and FR channels to the Front Right Speaker. If the Center channel is present, then the Front Left, Front Right, and Center channel will be used to produce a stereo image. If the Center channel is *not* present, then only the Front Left and Front Right speakers will produce the stereo image.
MONO	If the Center channel speaker is present (or enabled), the audio is played only through the Center channel (the Front Left and Front Right speakers will be muted). If the Center channel speaker is *not* present (or disabled), Front Left and Front Right signals will be combined and played out of the Front Left and Front Right speaker.
PLII	Transforms two-channel stereo into high-quality 5.1-channel surround sound.

NOTE: PLII (Dolby Pro Logic II) Mode processes the stereo signal source into five separate full frequency channels.

Using the front-panel buttons

Example 1: Assigning the optical (TOSLINK) input with the Multichannel Stereo audio processing mode:

1. From the Standby Screen, press the **Menu** button. Use the **Volume ▲** or **Volume ▼** buttons to navigate to the Audio Setup menu:

2. Press the **Mode / OK** button. The front-panel display will display the coaxial option:

3. Use the **Volume ▼** button to navigate to the optical option:

4. Press the **Mute ►** or **Input ◄** button to access the current setting for the optical (TOSLINK) input. In the illustration below, the optical input is set to use the Direct audio processing mode, by default:

5. Press the **Mute ►** or **Input ◄** button to change the current (favorite) setting. In the illustration below, we have set the optical input to use the Multichannel Stereo audio processing mode:

Example 2: Assigning the analog L/R inputs with the Dolby Pro Logic II audio processing mode:

1. Starting from Step 5, above, use the **Volume** ▼ button to navigate to the analog L/R option:

2. Press the **Mute** ► or **Input** ◄ button to access the current setting for the analog L/R input. In the illustration below, the analog L/R input is set to use the Stereo audio processing mode:

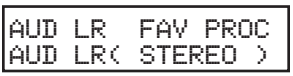

3. Press the **Mute** ► or **Input** ◄ button to change the current (favorite) setting from Stereo to PLII (Dolby Pro Logic II):

4. Press the Exit button to save all changes and return to the Audio Setup menu.

Using the IR Remote Control

Example 1: Assigning the optical (TOSLINK) input to use the Multichannel Stereo audio processing mode:

1. From the Standby Screen, press the **MENU** button. Use the ▲ or ▼ button to navigate to the Audio Setup menu:

```
MAIN MENU
AUDIO SETUP
```

2. Press the **ENTER** button. The front-panel display will display the coaxial option:

```
AUDIO SETUP
COAXIAL FAV PROC
```

3. Use the ▼ button to navigate to the optical option:

```
AUDIO SETUP
OPTICAL FAV PROC
```

4. Press the ► or ◄ button to access the current setting for the optical (TOSLINK) input. In the illustration below, the optical input is set to use the Direct audio processing mode, by default:

```
OPTICAL FAV PROC
OPTIL ( DIRECT )
```

5. Press the ► or ◄ button to change the current (favorite) setting. In the illustration below, we have set the optical input to use the Multichannel Stereo audio processing mode:

```
OPTICAL FAV PROC
OPTIL (MCH STER)
```

Example 2: Assigning the analog L/R inputs to use the Dolby Pro Logic II audio processing mode:

1. Starting from Step 5, on the previous page, use the ▼ button to navigate to the analog L/R option:

2. Press the ► or ◄ button to access the current setting for the analog L/R input. In the illustration below, the analog L/R input is set to use the Stereo audio processing mode:

3. Press the ► or ◄ button to change the current (favorite) setting from Stereo to PLII (Dolby Pro Logic II):

4. Press the **EXIT** button to save all changes and return to the Audio Setup menu.

Dynamic Range Compression

Dynamic Range Compression (DRC) applies compression to the output signal, preventing the signal from becoming too loud. This function only affects Dolby audio and not PCM. The default setting for Dynamic Range Compression is OFF.

Using the front-panel buttons

1. From the Standby screen, press the **Menu** button.
2. Use the **Volume ▲** or **Volume ▼** buttons to navigate to the Audio Setup menu.

3. Press the **Mode / OK** button.
4. Use the **Volume ▲** or **Volume ▼** buttons to select the DRC option:

5. Press the ◄ or ► button to change to enable DRC.

6. Press the **Exit** button to save the changes and return to the Audio Setup menu.

Using the IR Remote Control

1. From the Standby screen, press the **MENU** button.
2. Use the ▲ or ▼ buttons to navigate to the Audio Setup menu.

3. Press the **ENTER** button.
4. Use the ▲ or ▼ buttons to select the DRC option:

5. Press the ◄ or ► button to change to enable DRC.

6. Press the **EXIT** button to save the changes and return to the Audio Setup menu.

Audio Enhancement Modes

The 4x1 Switcher w/ Audio Decoding provides four distinct audio enhancement modes. Each of these modes provide a different audio listening experience.

Available Modes

Mode	Description
NIGHT	Increases the volume of quiet passages, while decreasing the volume of loud passages. Similar to DRC but works with all audio signals.
VOICE	Detects speech audio patterns and separates them from the background sounds, making them more intelligible.
VOLUME	Real-time detection of the source audio gain, providing constant volume level between changing channels and commercial advertisements.
OFF	Disables audio enhancement mode.

Using the front-panel buttons

1. From the Standby screen, press the **Menu** button.
2. Use the **Volume ▲** or **Volume ▼** buttons to navigate to the Audio Setup menu.

3. Press the **Mode / OK** button.
4. Use the **Volume ▲** or **Volume ▼** buttons to select the Enhancement option:

5. Press the ◄ or ► button to change to change the audio enhancement mode. In the illustration below, the audio enhancement mode has been set to Night mode:

6. Press the **Exit** button to save the changes and return to the Audio Setup menu.

Using the IR Remote Control

1. From the Standby screen, press the **MENU** button.
2. Use the ▲ or ▼ buttons to navigate to the Audio Setup menu.

3. Press the **ENTER** button.
4. Use the ▲ or ▼ buttons to select the Enhancement option:

5. Press the ◄ or ► button to change to change the audio enhancement mode. In the illustration below, the audio enhancement mode has been set to Night mode:

6. Press the **EXIT** button to save the changes and return to the Audio Setup menu.

Setting the Unit of Measure

When adjusting the speaker distance, either feet or meters can be specified.

Using the front-panel buttons

1. From the Standby Screen, press the **Menu** button. Use the **Volume ▲** or **Volume ▼** buttons to navigate to the Misc Setup menu.

2. Press the **Mode / OK** button. The front-panel display will show the current distance for the Front Left speaker:

   In the illustration below, the current unit of measure is set to meters.

3. To change the unit of measure to feet, press the **Mute ►** or **Input ◄** button to change the unit of measure to feet.

4. Press the **Exit** button to save the changes and return to the Misc Setup menu.

Using the IR Remote Control

1. From the Standby Screen, press the **MENU** button. Use the ▲ or ▼ buttons to navigate to the Misc Setup menu.

2. Press the **ENTER** button. The front-panel display will show the current distance for the Front Left speaker:

   In the illustration below, the current unit of measure is set to meters.

3. To change the unit of measure to feet, press the ◄ or ► button to change the unit of measure to feet.

4. Press the **EXIT** button to save the changes and return to the Misc Setup menu.

Setting the EDID Mode

The 4x1 Switcher w/ Audio Decoding has three EDID modes (INT, EXT, and MIX).

- **INT Mode**
  The internal (local) EDID is used instead of the EDID from the display device. EDID features newer than HDMI 1.3 are removed from the EDID data structure when the display is read. This provides a general EDID which is compatible with more displays.

- **EXT Mode**
  The external (downstream) EDID is used. In this mode, both DDC and HPD are passed through and the Switcher uses the full video capabilities of the display. The HPD status will also be detected by the source device.

- **MIX Mode**
  The display capabilities from the external EDID are combined with the audio capabilities of the internal EDID of the Switcher.

Using the front-panel buttons

1. To set the EDID mode, press the **Menu** button from the Standby screen.
2. Use the **Volume ▲** or **Volume ▼** buttons to navigate to the Misc Setup menu.

3. Press the **Mode / OK** button.
4. Use the **Volume ▲** or **Volume ▼** buttons to select the EDID adjustment menu. In the illustration below, the internal (INT) EDID is being used.

5. To change the EDID mode, press the **Mute ►** or **Input ◄** buttons to the desired EDID mode (below, the mixed-mode EDID has been selected).

6. Press the **Exit** button to save the changes and return to the Misc Setup menu.

Using the IR Remote Control

1. To set the EDID mode, press the **MENU** button from the Standby screen.
2. Use the ▲ or ▼ buttons to navigate to the Misc Setup menu.

3. Press the **ENTER** button.
4. Use the ▲ or ▼ button to select the EDID adjustment menu. In the illustration below, the internal (INT) EDID is being used.

5. To change the EDID mode, press the ◄ or ► button to the desired EDID mode (below, the mixed-mode EDID has been selected).

6. Press the **EXIT** button to save the changes and return to the Misc Setup menu.

Setting the IR Channel

When controlling the 4x1 Switcher w/ Audio Decoding using the IR Remote Control Unit, the IR channel on the Switcher must be the same as the IR channel set on the IR Remote Control Unit. See page 11 on changing the IR channel on the IR Remote Control Unit.

Using the front-panel buttons

1. From the Standby screen, press the **Menu** button.
2. Use the **Volume ▲** or **Volume ▼** buttons to navigate to the Misc Setup menu.

3. Press the **Mode / OK** button.
4. Use the **Volume ▲** or **Volume ▼** buttons to select the IR channel menu. In the illustration below, the IR channel is set to 1.

5. Press the **Mute ►** or **Input ◄** buttons to change to the required IR channel.

6. Press the **Exit** button to save the changes and return to the Misc Setup menu.

Using the IR Remote Control

1. From the Standby screen, press the **MENU** button.
2. Use the ▲ or ▼ button to navigate to the Misc Setup menu.

3. Press the **Mode / OK** button.
4. Use the ▲ or ▼ button to select the IR channel menu. In the illustration below, the IR channel for the Switcher is set to 1.

5. Press the ◄ or ► button to change to the required IR channel.

6. Press the **Exit** button to save the changes and return to the Misc Setup menu.

Resetting the Switcher to Factory Settings

If the Switcher needs to be reset for any reason or if you need to set the unit to factory (default) settings, follow the instructions below.

Using the front-panel buttons

1. From the Standby screen, press the **Menu** button.
2. Use the **Volume ▲** or **Volume ▼** buttons to navigate to the Misc Setup menu.

   ```
   MAIN MENU
   MISC SETUP
   ```

3. Press the **Mode / OK** button.
4. Use the **Volume ▲** or **Volume ▼** buttons to select the Factory Defaults option.

   ```
   MISC SETUP
   FACTORY DEFAULT
   ```

5. Press the **Mode / OK** button. The Switcher will prompt you to confirm the selection.

   ```
   OK TO F.DEFAULT
   MENU TO CANCEL
   ```

   Press the **Mode / OK** button to reset the Switcher to factory (default) settings. If the Switcher is reset, the Switcher will power OFF and then automatically power ON after a few moments.

   Press the **Menu** button to cancel the reset process and return to the Standby screen.

Using the IR Remote Control

1. From the Standby screen, press the **MENU** button.
2. Use the ▲ or ▼ buttons to navigate to the Misc Setup menu.

3. Press the **ENTER** button.
4. Use the ▲ or ▼ buttons to select the Factory Defaults option.

5. Press the **ENTER** button. The Switcher will prompt you to confirm the selection.

   Press the **ENTER** button to reset the Switcher to factory (default) settings. If the Switcher is reset, the Switcher will power OFF and then automatically power ON after a few moments.

   Press the **MENU** button to cancel the reset process and return to the Standby screen.

Only Pins 2 (RX), 3 (TX), and 5 (Ground) are used on the RS-232 serial interface

RS232 Settings

Bits per second 19200
Data bits 8
Parity ..... None
Stop bits 1
Flow Control ..... None

IMPORTANT: When sending RS-232 commands, a carriage return must be included at the end of the command. A space *must* be included between the command and the parameter.

NOTE: The return value will be displayed when using a terminal-based application, indicating the current value after executing the command.

Commands

Command	Description
AUDIO	Selects between S/PDIF, TOSLink, or Analog audio input
BASS	Increases or decreases the bass
CT	Sets the size of the Center speaker
DC	Sets the distance for the Center speaker
DFL	Sets the distance for the Front Left speaker
DFLT	Sets the Switcher to factory (default) settings
DFR	Sets the distance for the Front Right speaker
DRC	Adjusts the Dynamic Range Control
DSUB	Sets the distance for the Subwoofer
DSL	Sets the distance of the Left Surround speaker
DSR	Sets the distance of the Right Surround speaker
EDID	Sets the EDID mode
ENH	Sets the audio enhancement mode
FLR	Sets the size of the Front Left / Front Right speakers
HDMI	Set the HDMI input
HELP	Lists these RS-232 commands
INFO	Returns hardware and firmware version
INTYPE	Returns the input audio format
IR	Sets the IR channel for the Switcher
MD	Sets the audio mode
MUTE	Enables / disables audio muting
PWR	Powers the Switcher ON or OFF
SLR	Sets the size of the Surround Left and Surround Right speakers
STAT	Enables or disables auto status feedback
SUB	Enables / disables the subwoofer
SUBV	Adjusts the subwoofer volume
TEST	Plays a test tone to specified speaker zone
TREB	Increases / decreases the treble
TVTYPE	Sets the video broadcast format
VOL	Increases / decreases the overall output volume

AUDIO Command

The AUDIO command assigns the external audio input. The AUDIO command does not have any effect on the video input. See page 54 for information on changing the video source.

Syntax:

```
AUDIO param1
```

Parameters:

param1 Port [0 ... 3]

Value	Meaning
0	HDMI
1	S/PDIF
2	TOSLink
3	Analog RCA

Returns:

```
HDMI param1
```

param1	Meaning
*x*0	HDMI audio
*x*1	Coax (S/PDIF) audio
*x*2	Optical (TOSLINK) audio
*x*3	Analog L/R audio

The value *x* represents the current HDMI input selection. For example, if the Switcher is using HDMI Input 2 with the optical (TOSLINK) audio input, the return value would be *HDMI +22*.

Notes:

HDMI is the return prefix for the *AUDIO* command. See the *HDMI* command on page 54 for further reference.

Use ? for *param1* to retrieve the current value.

BASS Command

The BASS command sets the bass level.

Syntax:

```
BASS param1
```

Parameters:

param1	Level	[-12 ...12]

Returns:

```
BASS value
```

Value	Meaning
-12 ... +12	Bass level

Notes:

The + or - character can also be used, instead of specifying a value, in order to increase or decrease the bass level by 1 dB.

Use ? for *param1* to retrieve the current value.

Example:

```
bass +      // increases the bass level by 1 dB
bass -      // decreases the bass level by 1 dB
bass 5      // sets the bass level to +5 dB
```

CT Command

The CT command sets the state of the Center speaker.

Syntax:

```
CT param1
```

Parameters:

param1 State [0 ... 2]

Value	Meaning
0	Small Center speaker
1	Large Center speaker
2	OFF

Returns:

```
CT param1
```

param1	Meaning
+00	Small Center speaker
+01	Large Center speaker
+02	Center Speaker OFF

Notes:

Use ? for *param1* to retrieve the current value.

DC Command

The DC command sets the distance of the Center speaker.

Syntax:

```
DC param1
```

Parameters:

param1 Distance [0 ... 20]

Returns:

```
DC param1
```

Notes:

Distance is measured in feet.

Use ? for *param1* to retrieve the current value.

DFL Command

The DFL command sets the distance of the Front Left speaker.

Syntax:

```
DFL param1
```

Parameters:

param1	Distance	[0 ... 20]

Returns:

```
DFL param1
```

Notes:

Distance is measured in feet.

Use ? for *param1* to retrieve the current value.

DFLT Command

The DFLT command sets the unit to the default settings.

Syntax:

```
DFLT 1
```

Parameters:

None

Returns

```
DFLT
```

Notes:

The value of 1 must be specified as a parameter.

DFR Command

The DFR command sets the distance for the Front Right speaker.

Syntax:

```
DFR param1
```

Parameters:

param1	Distance	[0 ... 20]

Returns:

```
DFR param1
```

Notes:

Distance is measured in feet.

Use ? for *param1* to retrieve the current value.

DRC Command

The DRC command enables or disables Dynamic Range Control.

Syntax:

```
DRC param1
```

Parameters:

param1 Value

Value	Meaning
0	Turn DRC OFF
1	Turn DRC On

Returns:

```
DRC param1
```

param1	Meaning
DRC +00	DRC is OFF
DRC +01	DRC is ON

Notes:

Use ? for *param1* to retrieve the current value.

DSB Command

The DSB command sets the distance for the Subwoofer.

Syntax:

```
DSB param1
```

Parameters:

param1	Distance	[0 ... 20]

Returns:

```
DSB param1
```

Notes:

Distance is measured in feet.

Use ? for *param1* to retrieve the current value.

DSL Command

The DSL command sets the distance for the Surround Left speaker.

Syntax:

```
DSL param1
```

Parameters:

param1	Distance	[0 ... 20]

Returns:

```
DSL param1
```

Notes:

Distance is measured in feet.

Use ? for *param1* to retrieve the current value.

DSR Command

The DSR command sets the distance for the Surround Right speaker.

Syntax:

```
DSR param1
```

Parameters:

param1	Distance	[0 ... 20]

Returns:

```
DSR param1
```

Notes:

Distance is measured in feet.

Use ? for *param1* to retrieve the current value.

EDID Command

The EDID command sets the EDID mode.

Syntax:

```
EDID param1
```

Parameters:

param1 Mode [0 ... 2]

Value	Meaning
0	EDID Mix
1	Internal EDID
2	External EDID

Returns:

```
EDID param1
```

Returns:

```
EDID param1
```

param1	Meaning
EDID +00	Mix Mode
EDID +01	Internal EDID Mode
EDID +02	External EDID Mode

Notes:

Internal EDID will use the built-in EDID of the Switcher. External EDID uses the downstream EDID of the display. The EDID Mix Mode will use the full video capabilities of the display and combine the full audio capabilities of the Internal EDID of the Switcher. The Switcher will power-cycle after the command has been issued.

Use ? for *param1* to retrieve the current value.

ENH Command

The ENH command sets the audio enhancement mode.

Syntax:

```
ENH param1
```

Parameters:

param1 Mode [0 ... 20]

Value	Meaning
0	Night Mode
1	Voice Mode
2	Volume Mode
3	Audio Enhance OFF

Returns:

```
ENH Value
```

Value	Meaning
ENH +00	Night Mode
ENH +01	Voice Mode
ENH +02	Volume Mode
ENH +03	ENH Mode OFF

Notes:

Use ? for *param1* to retrieve the current value.

FLR Command

The FLR command sets the size for the Front Left / Front Right speakers.

Syntax:

```
FLR param1
```

Parameters:

param1 Size [0 ... 1]

Value	Meaning
0	Small Front Speakers
1	Large Front Speakers

Returns:

```
FLR Value
```

Value	Meaning
+00	Small Front Speakers
+01	Large Front Speakers

Notes:

Use ? for *param1* to retrieve the current value.

HDMI Command

The HDMI command sets the active HDMI input. The HDMI command does not have any effect on the audio input. See page 44 for information on changing the audio source.

Syntax:

```
HDMI param1
```

Parameters:

param1 Input [1 ... 4]

Input	Meaning
1	HDMI Input 1
2	HDMI Input 2
3	HDMI Input 3
4	HDMI Input 4

Returns:

```
HDMI param1
```

param1	Meaning
+10	Set to HDMI Input 1
+20	Set to HDMI Input 2
+30	Set to HDMI Input 3
+40	Set to HDMI Input 4

Notes:

When executing the HDMI command, the audio will default to HDMI (embedded) audio. Use the AUDIO command (see page 44) to change the audio input.

Use ? for *param1* to retrieve the current value.

HELP Command

The HELP command lists the RS-232 command set.

Syntax:

```
HELP ?
```

Parameters:

None

Notes:

The ? character must be specified as a parameter.

INFO Command

The INFO command returns hardware and firmware version.

Syntax:

```
INFO ?
```

Parameters:

None

Notes:

The ? character must follow the command.

INTYPE Command

The INTYPE command returns the audio input format.

Syntax:

```
INTYPE ?
```

Parameters:

None

Returns:

Value [0 ... 4]

Value	Meaning
+00	None
+01	PCM 2.1
+02	PCM 5.1
+03	Dolby Digital 2.1
+04	Dolby Digital 5.1

Notes:

The ? character must follow the command.

IR Command

The IR command sets the IR channel for the Switcher.

Syntax:

```
IR param1
```

Parameters:

param1 Channel [0 ... 3]

Input	Meaning
1	IR Channel 1
2	IR Channel 2
3	IR Channel 3
4	IR Channel 4

Returns:

```
IR Value
```

Value	Meaning
+01	IR Channel 1
+02	IR Channel 2
+03	IR Channel 3
+04	IR Channel 4

Notes:

Use ? for *param1* to retrieve the current value.

MD Command

The MD command sets the audio mode.

Syntax:

```
MD param1
```

Parameters:

param1 Mode [0 ... 4]

Mode	Meaning
0	Pro Logic Surround
1	Direct Input
2	Downmix to Stereo L/R
3	Multichannel Surround
4	Downmix to Mono

Returns:

```
MD param1
```

Mode	Meaning
+00	Pro Logic Surround
+01	Direct Input
+02	Downmix to Stereo L/R
+03	Multichannel Surround
+04	Downmix to Mono

Notes:

Use ? for *param1* to retrieve the current value.

MUTE Command

The MUTE command sets the audio mode.

Syntax:

```
MUTE param1
```

Parameters:

param1 Mode [0 ... 3]

Mode	Meaning
0	Disable mute
1	Volume set to minimum
2	Mute toggle

Returns:

Using RS-232, the following values are returned

Value	Meaning
MUTE +00	Mute is OFF
MUTE +01	Mute is ON
MUTE +00	Mute toggled OFF
MUTE +01	Mute toggled ON

Notes:

Setting *param1* to 2 will toggle the current audio muting state.

Use ? for *param1* to retrieve the current value.

PWR Command

The PWR command turns the Scaler ON or OFF.

Syntax:

```
PWR param1
```

Parameters:

param1 Mode [0 ... 2]

Mode	Meaning
0	Power save mode
1	Power On
2	Toggle power state

Returns:

Using RS-232, the following values are returned

Value	Meaning
PWR +00	Power save mode ON
PWR +01	Power save mode OFF
PWR +00	Power toggled OFF
PWR +01	Power toggled ON

Notes:

Setting *param1* to 2 will automatically toggle the current power state.

Use ? for *param1* to retrieve the current value.

SLR Command

The SLR command sets the size of the Surround Left / Surround Right speakers.

Syntax:

```
SLR param1
```

Parameters:

param1 Size [0 ... 2]

Size	Meaning
0	Small Surround speakers
1	Large Surround speakers
2	Disable Surround speakers

Returns:

```
SLR value
```

Value	Meaning
+00	Small Surround speakers
+01	Large Surround speakers
+02	Disable Surround speakers

Notes:

Use ? for *param1* to retrieve the current value.

STAT Command

The STAT command enables or disables auto status feedback.

Syntax:

```
STAT param1
```

Parameters:

param1 Mode [0 ... 1]

Mode	Meaning
0	Auto Status Off
1	Auto Status On

Returns:

```
STAT value
```

Value	Meaning
+00	Auto Status Off
+01	Auto Status On

Notes:

Use ? for *param1* to retrieve the current value.

SUB Command

The SUB command enables or disables the subwoofer.

Syntax:

```
SUB param1
```

Parameters:

param1 Mode [0 ... 1]

Mode	Meaning
0	Subwoofer Off
1	Subwoofer On

Returns:

```
SUB value
```

Value	Meaning
+00	Auto Status Off
+01	Auto Status On

Notes:

Use ? for *param1* to retrieve the current value.

SUBV Command

The SUBV command sets the volume level of the Subwoofer.

Syntax:

```
PWR param1
```

Parameters:

param1	Range	[-12 ... 12]

Returns:

```
SUBV value
```

Value	Meaning
-12 ... +12	Subwoofer volume

Notes:

The + or - character can also be used, instead of specifying a value, in order to increase or decrease the subwoofer level by 1 dB intervals.

Use ? for *param1* to retrieve the current value.

TEST Command

The TEST command plays a test tone to specified speaker zone

Syntax:

```
TEST param1
```

Parameters:

param1 Zone [0 ... 6]

Zone	Meaning
0	Test tone to Front Left
1	Test tone to Center
2	Test tone to Front Right
3	Test tone to Surround Right
4	Test tone to Surround Left
5	Test tone to Subwoofer
6	Turn off current test tone

Returns:

```
TEST value
```

Value	Meaning
+00	Test tone to Front Left
+01	Test tone to Center
+02	Test tone to Front Right
+03	Test tone to Surround Right
+04	Test tone to Surround Left
+05	Test tone to Subwoofer
+06	Turn off current test tone

Notes:

The command *test 6* must be invoked to halt the current test tone. The test tone can only be sent to one zone at a time (multiple zones cannot play test tones).

TREB Command

The TREB command sets the treble level.

Syntax:

```
TREB param1
```

Parameters:

param1 Range [-12 ... 12]

Returns:

```
TREB value
```

Value	Meaning
-12 ... +12	Treble setting

Notes:

The + or - character can also be used, instead of specifying a value, in order to increase or decrease the treble level by 1 dB intervals.

Use ? for *param1* to retrieve the current value.

TVTYPE Command

The TVTYPE command sets the video broadcast format.

Syntax:

```
TVTYPE param1
```

Parameters:

param1 Format [0 ... 1]

Format	Meaning
0	NTSC format
1	PAL format

Returns:

```
TVTYPE value
```

Value	Meaning
+00	NTSC format
+01	PAL format

Notes:

Use ? for *param1* to retrieve the current value.

VOL Command

The VOL command sets the overall output volume level.

Syntax:

```
VOL param1
```

Parameters:

param1	Range	[-60 ... 12]

Returns:

```
VOL value
```

Value	Meaning
-60 ... +12	Volume level

Notes:

The + or - character can also be used, instead of specifying a value, in order to increase or decrease the volume level by 1 dB intervals.

Use ? for *param1* to retrieve the current value.

Main Menu

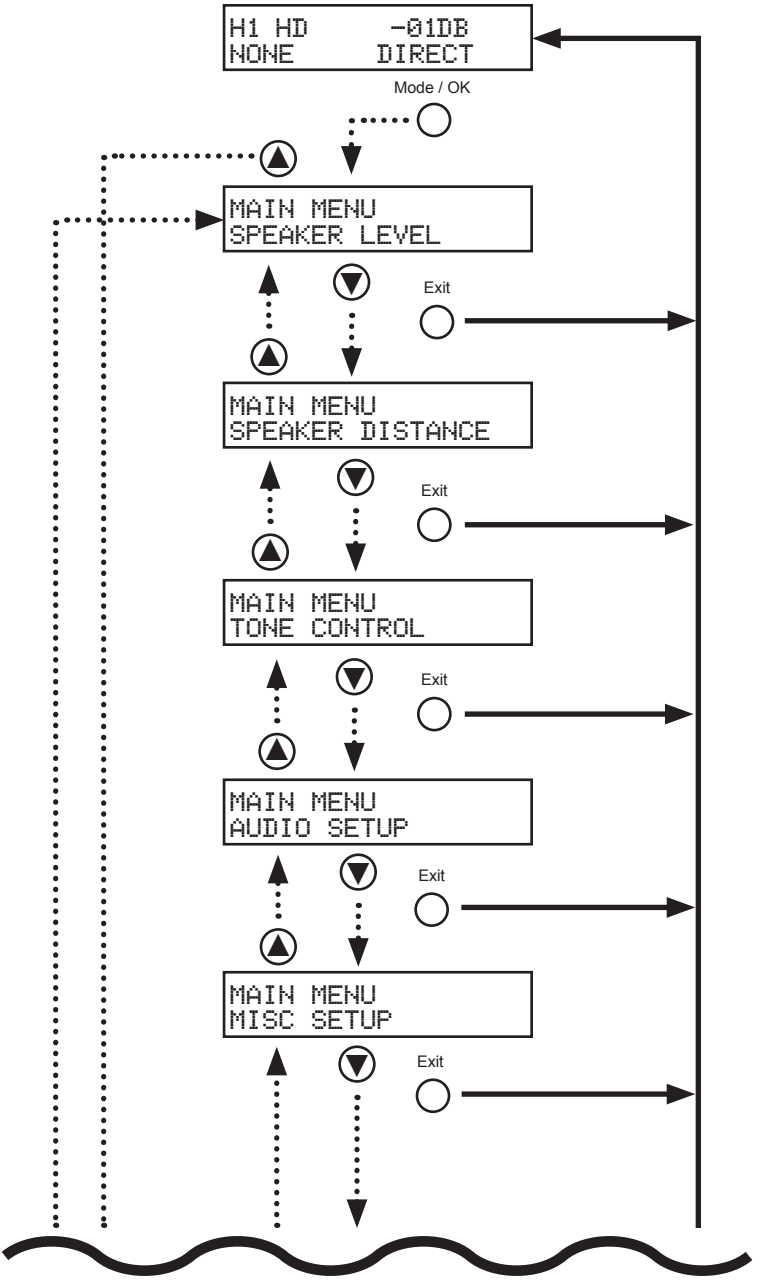
H1 HD -01DB
NONE DIRECT
Mode / OK
MAIN MENU
SPEAKER LEVEL
Exit
MAIN MENU
SPEAKER DISTANCE
Exit
MAIN MENU
TONE CONTROL
Exit
MAIN MENU
AUDIO SETUP
Exit
MAIN MENU
MISC SETUP
Exit

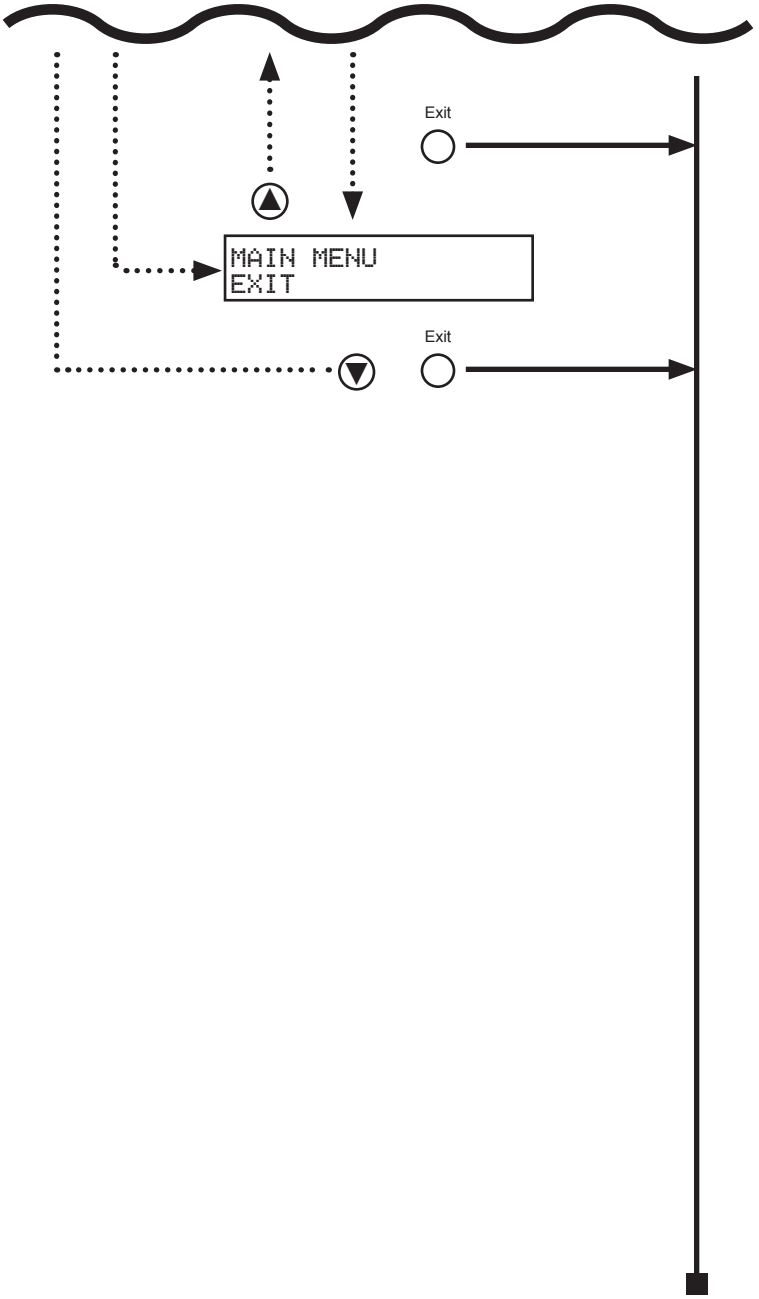
Exit
MAIN MENU
EXIT
Exit

Speaker Size Menu

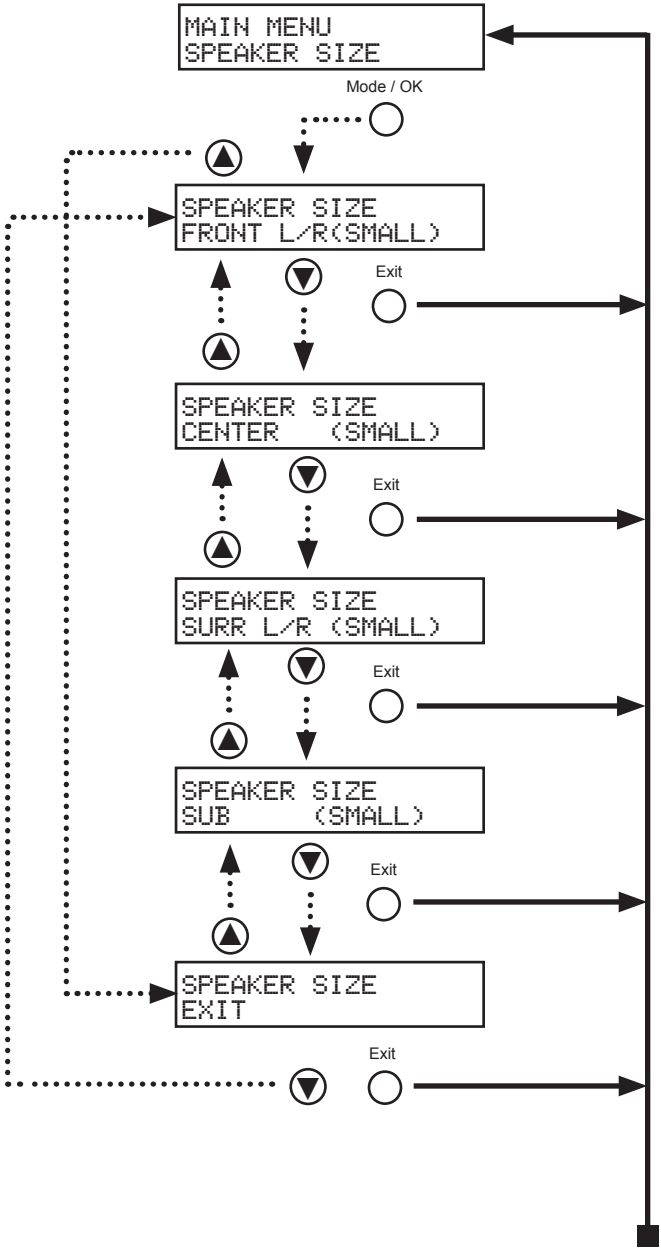

Speaker Level Menu

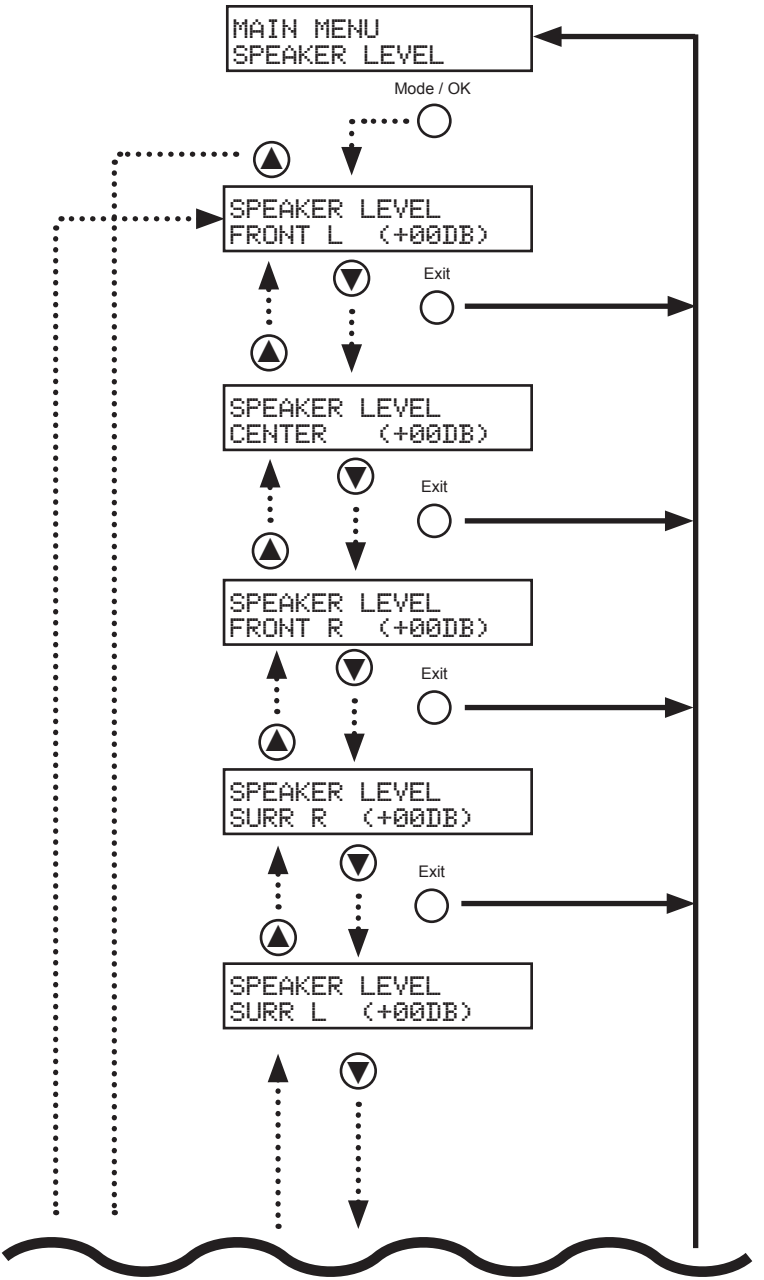

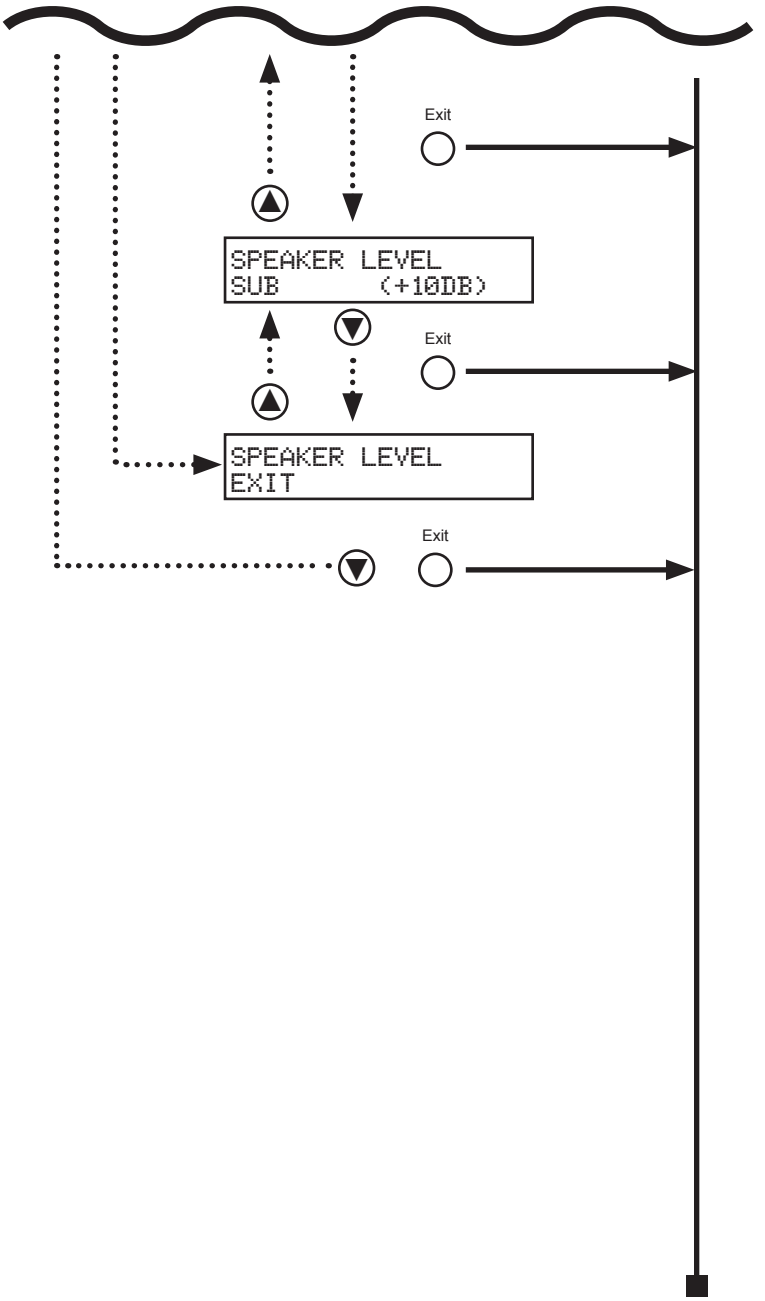
Exit
SPEAKER LEVEL
SUB (+10DB)
Exit
SPEAKER LEVEL
EXIT
Exit

Speaker Distance Menu

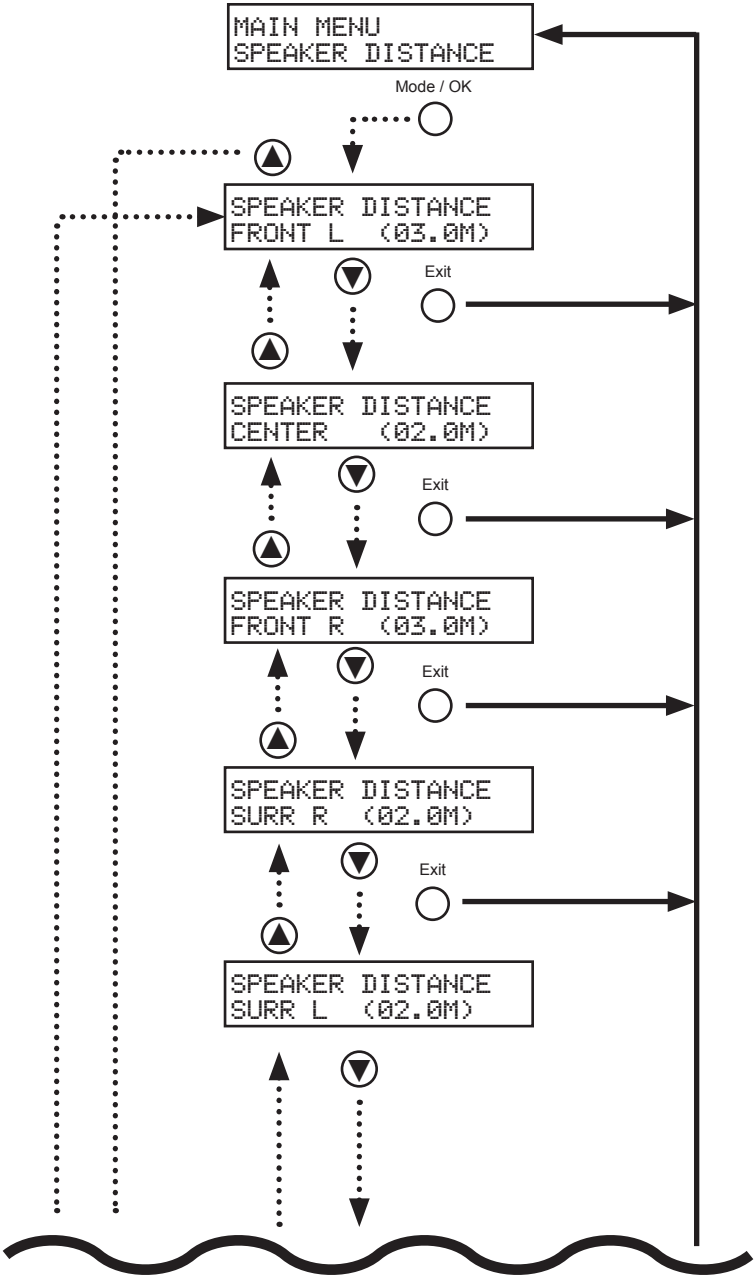

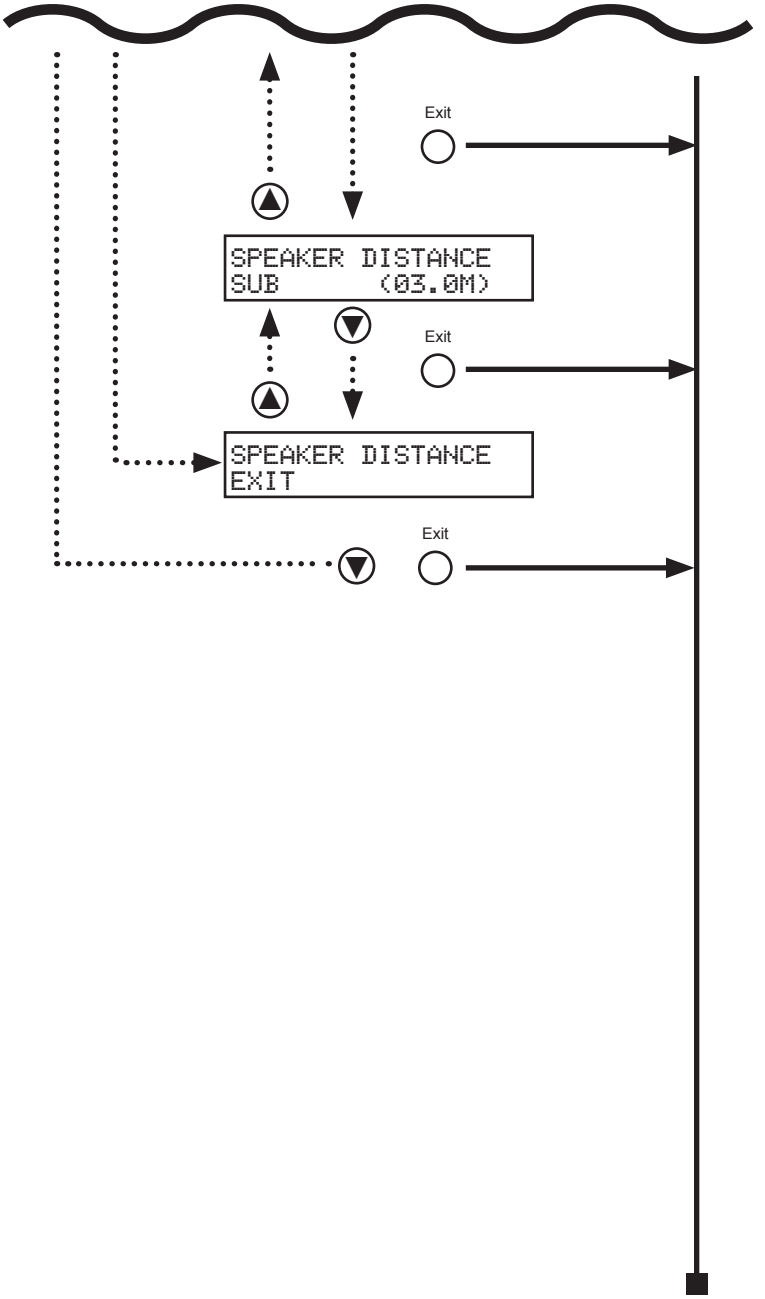
Exit
SPEAKER DISTANCE
SUB (03.0M)
Exit
SPEAKER DISTANCE
EXIT
Exit

Tone Control Menu

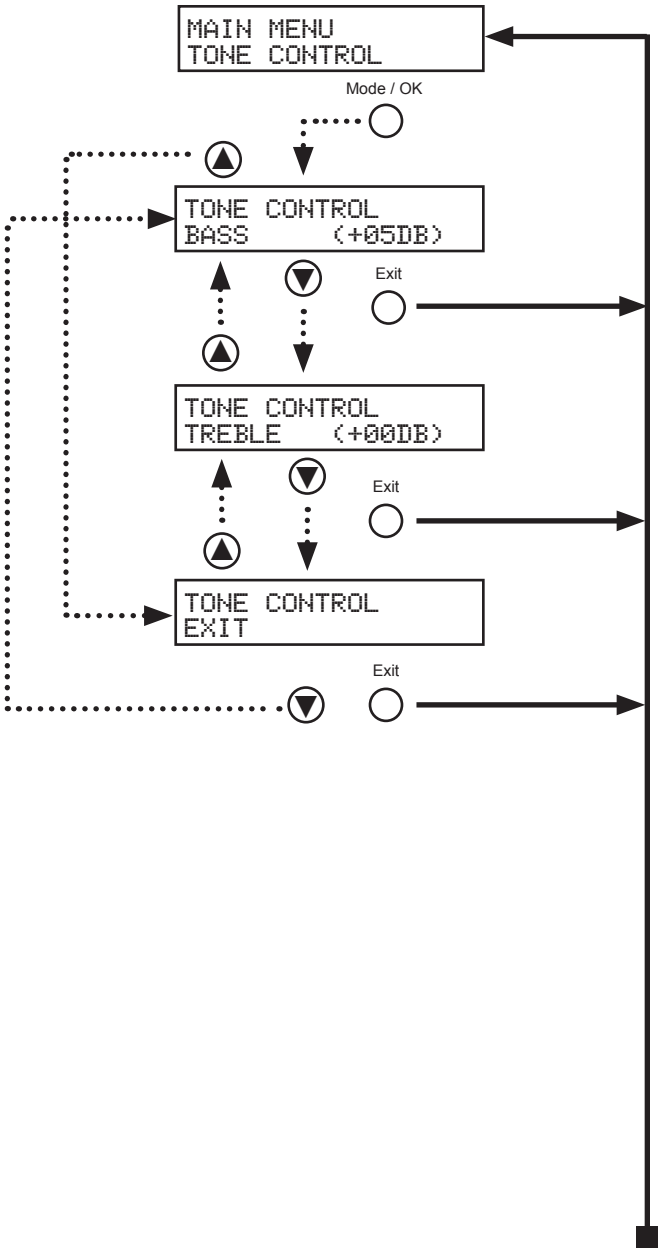

Audio Setup Menu

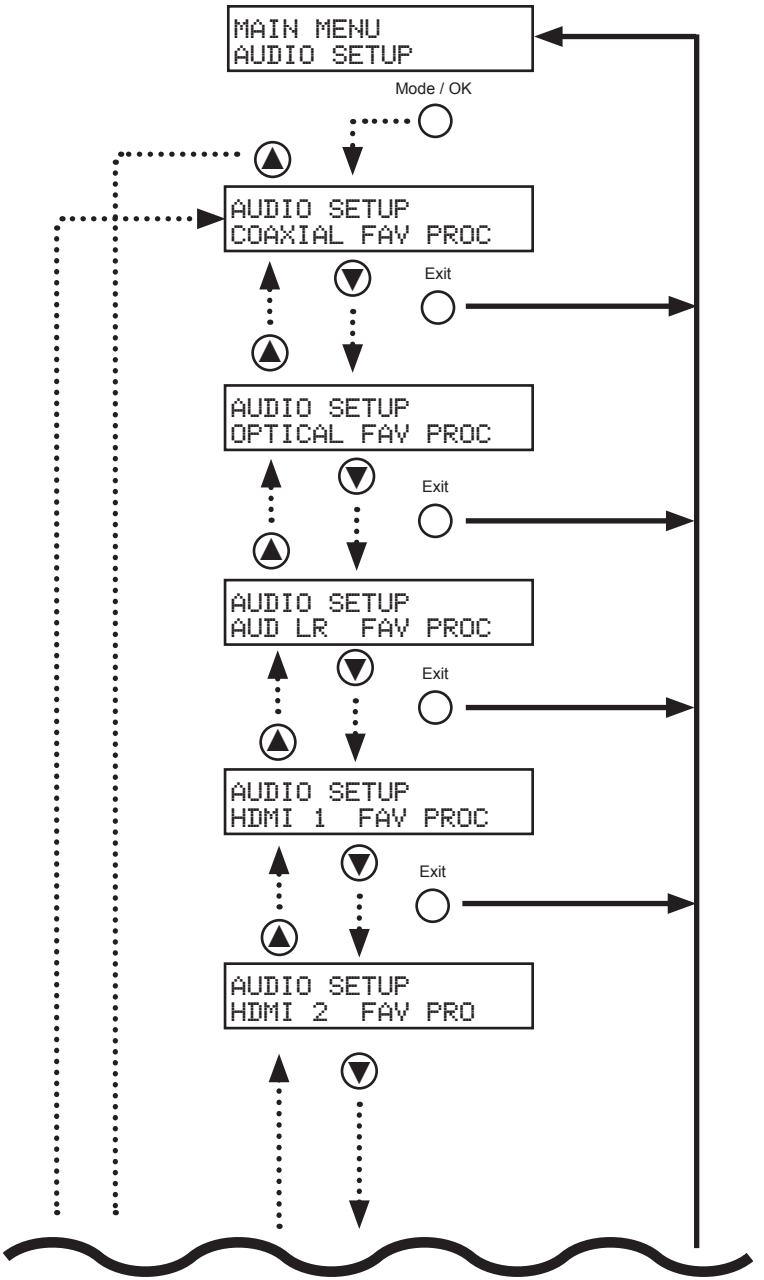

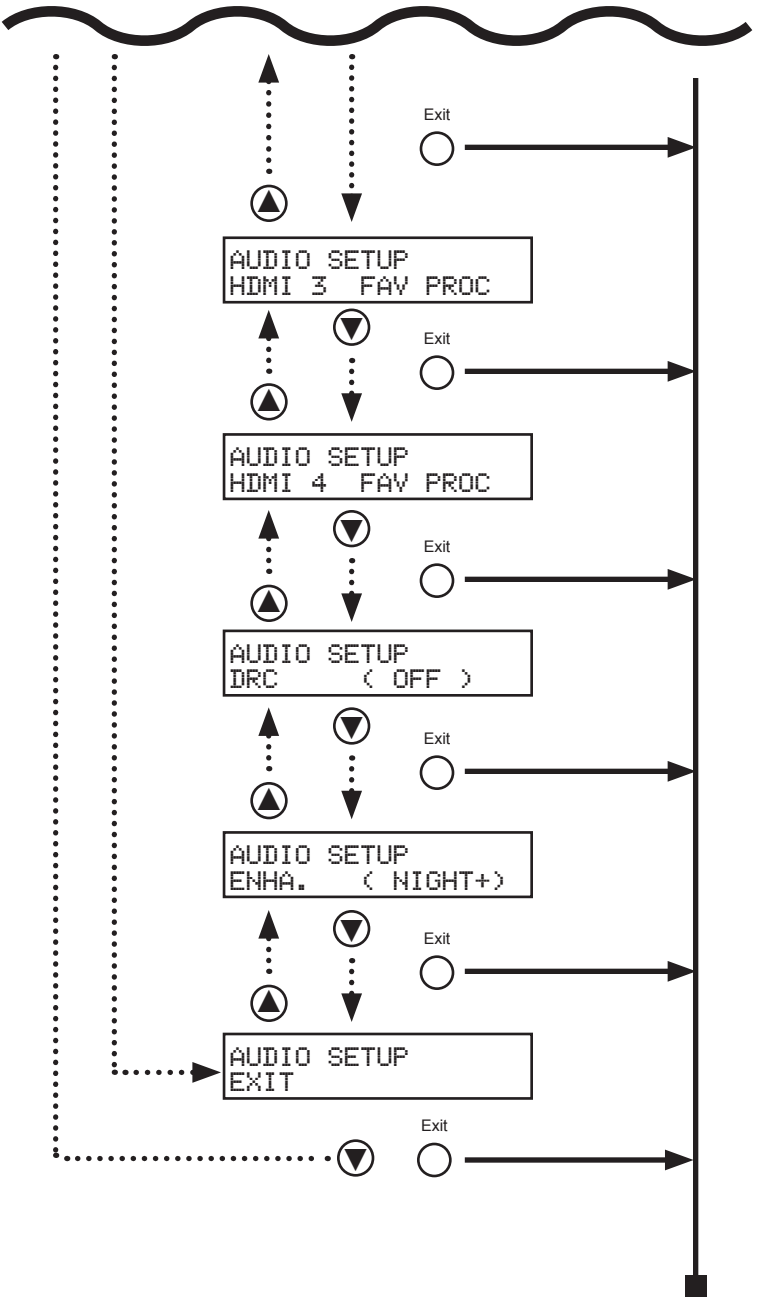
Exit
AUDIO SETUP
HDMI 3 FAV PROC
Exit
AUDIO SETUP
HDMI 4 FAV PROC
Exit
AUDIO SETUP
DRC (OFF)
Exit
AUDIO SETUP
ENHA. (NIGHT+)
Exit
AUDIO SETUP
EXIT
Exit

Misc Setup Menu

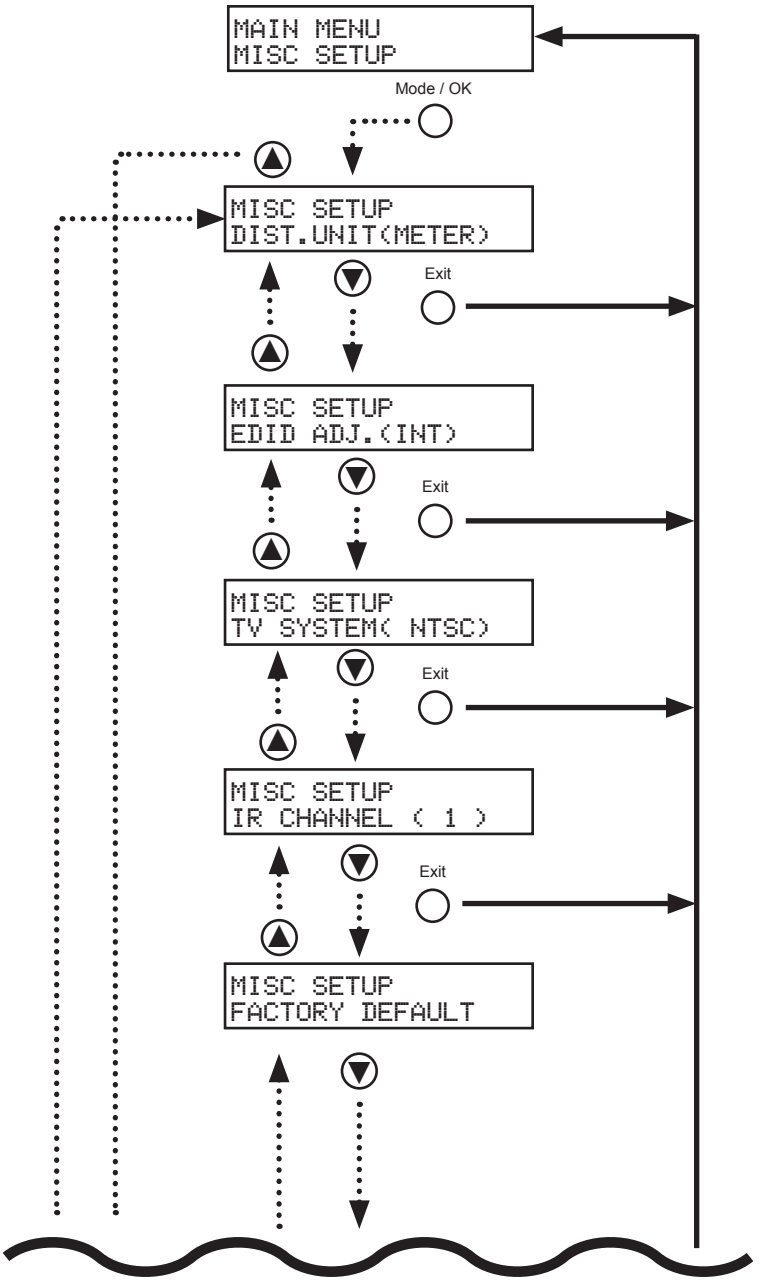

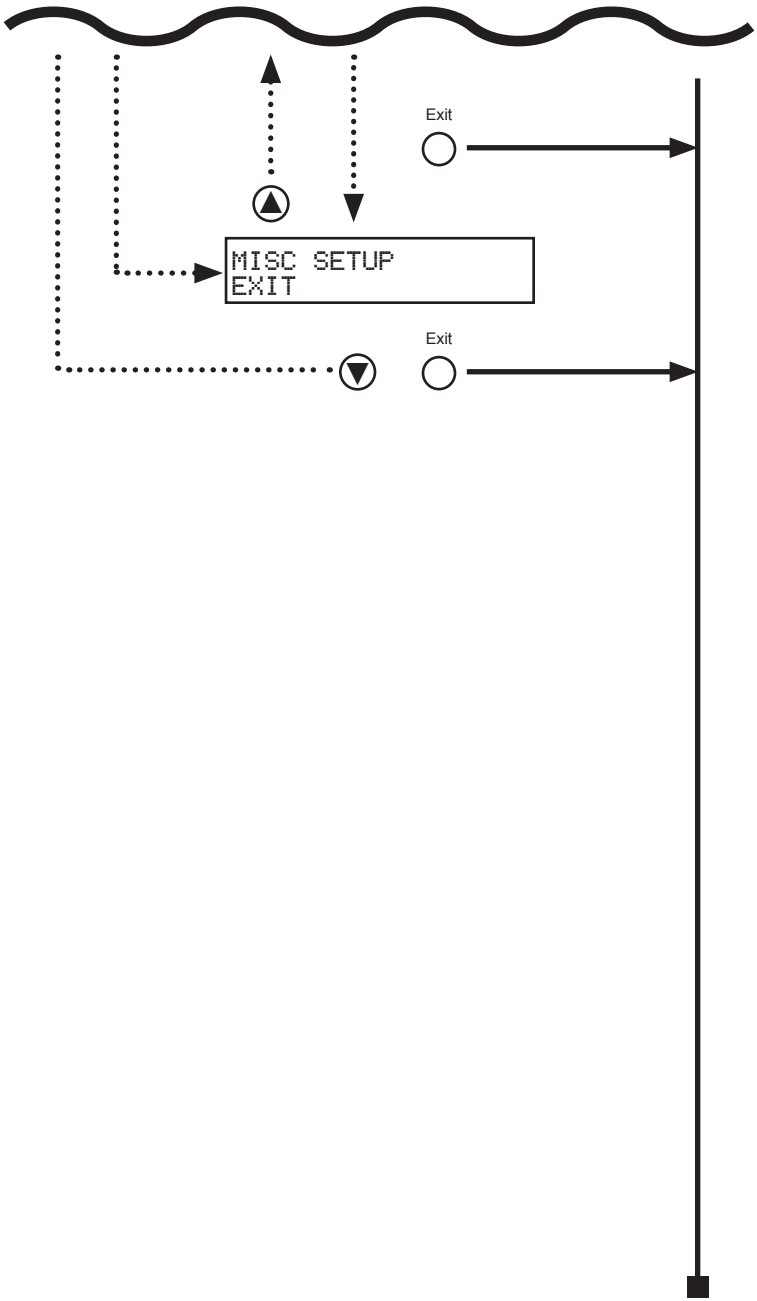
Exit
MISC SETUP
EXIT
Exit

SPECIFICATIONS

Maximum Pixel Clock ..... 225 MHz

Input DDC Signal ..... 5 Volts p-p (TTL)

Single Link Range ..... 1080p/1920 x 1200 max. resolution

Digital Audio Input ..... 1 x S/PDIF coaxial

HDMI Input ..... 1 x HDMI Female 19-pin

HDMI Outputs ..... 2 x HDMI Female 19-pin

Digital Audio Output ..... 1 x S/PDIF coaxial

Digital Audio Output ..... 1 x TOSLINK optical

Analog Audio Outputs ..... 8 total
(6 analog audio RCA jacks + 2 additional RCA jacks for Bi-Amp)

Supported Audio Formats:
Dolby Digital 5.1 (AC3), LPCM HDMI direct (up to 6 ch.)

Audio Processing ..... Dolby Pro Logic II

Signal To Noise Ratio ..... > 90 dB (20Hz-20kHz A weight filter)

THD+N ..... < 0.1% at 1 kHz at reference level

Frequency Response ..... < +/- 0.5 dB 20 Hz - 20 kHz

Power Supply ..... 24V DC

Dimensions ..... 6.9” W x 2.1” H x 6.9” D

Shipping Weight ..... 6 lbs.

Gefen warrants the equipment it manufactures to be free from defects in material and workmanship.

If equipment fails because of such defects and Gefen is notified within two (2) years from the date of shipment, Gefen will, at its option, repair or replace the equipment, provided that the equipment has not been subjected to mechanical, electrical, or other abuse or modifications. Equipment that fails under conditions other than those covered will be repaired at the current price of parts and labor in effect at the time of repair. Such repairs are warranted for ninety (90) days from the day of reshipment to the Buyer.

This warranty is in lieu of all other warranties expressed or implied, including without limitation, any implied warranty or merchantability or fitness for any particular purpose, all of which are expressly disclaimed.

1. Proof of sale may be required in order to claim warranty.
2. Customers outside the US are responsible for shipping charges to and from Gefen.
3. Copper cables are limited to a 30 day warranty and cables must be in their original condition.

The information in this manual has been carefully checked and is believed to be accurate. However, Gefen assumes no responsibility for any inaccuracies that may be contained in this manual. In no event will Gefen be liable for direct, indirect, special, incidental, or consequential damages resulting from any defect or omission in this manual, even if advised of the possibility of such damages. The technical information contained herein regarding the features and specifications is subject to change without notice.

For the latest warranty coverage information, refer to the Warranty and Return Policy under the Support section of the Gefen Web site at www.gefen.com.

PRODUCT REGISTRATION

Please register your product online by visiting the Register Product page under the Support section of the Gefen Web site.

Rev A3

20600 Nordhoff St., Chatsworth CA 91311

1-800-545-6900 818-772-9100 fax: 818-772-9120

www.gefentv.com support@gefentv.com

This product uses UL listed power supplies.