RoHS

REV.	DESCRIPION	ECO NO.	UPDATE BY	DATE	APPROVED
A	DRAWING RELEASE	RD-007046	F.Roif	05/08/19	RADU N.

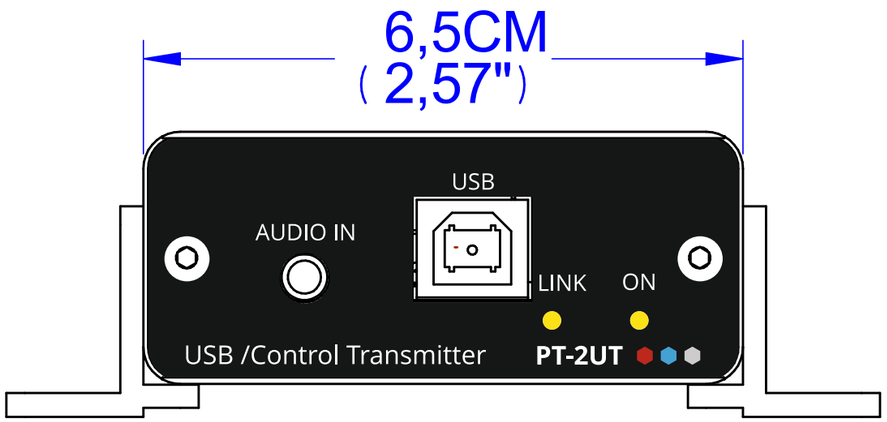

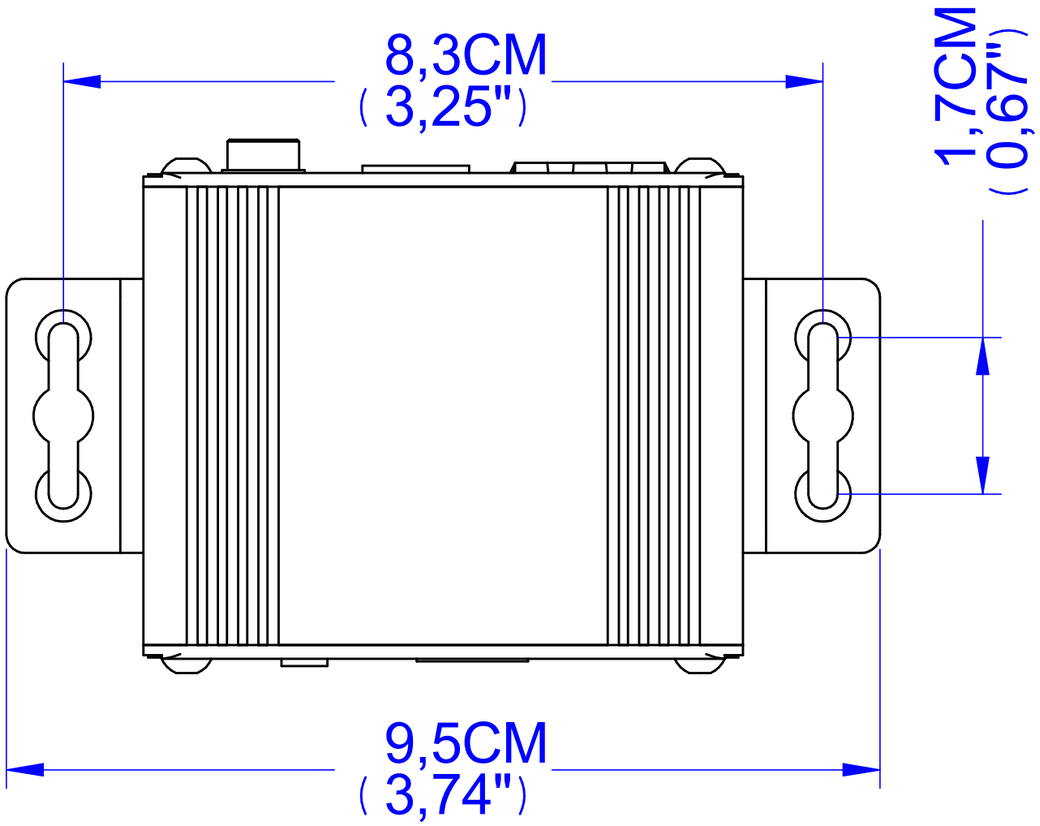

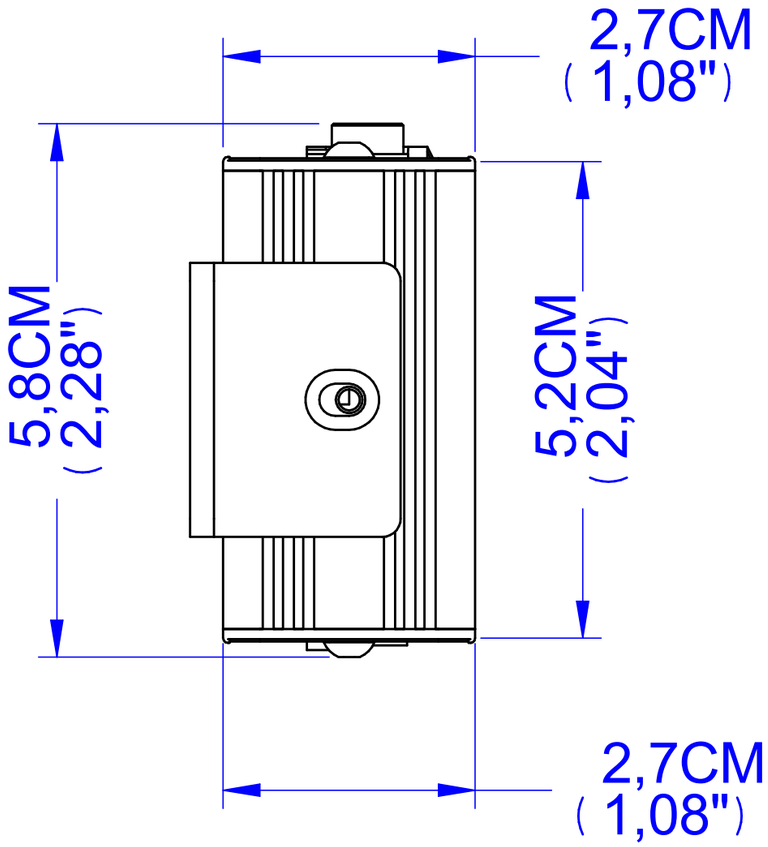

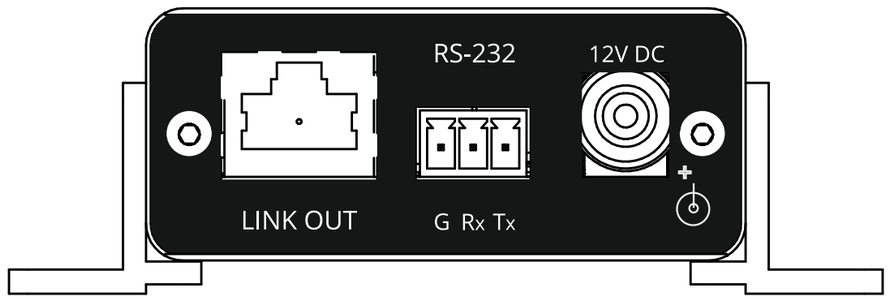

	NAME	DATE	KRAMER ELECTRONICS LTD. JERUSALEM, ISRAEL			
DRAWN	F.Roif	05/08/18				
APPROVED	RADU N.	05/08/18				
SHEET 1 OF 1	Project : PT-2UT			SIZE A3	KRAMER DRW.: OL000266	REV. A