REV.	DESCRIPION	ECO NO.	UPDATE BY	DATE	APPROVED
A	DRAWING RELEASED	015267	ARKADY	19/03/19	RADU N.

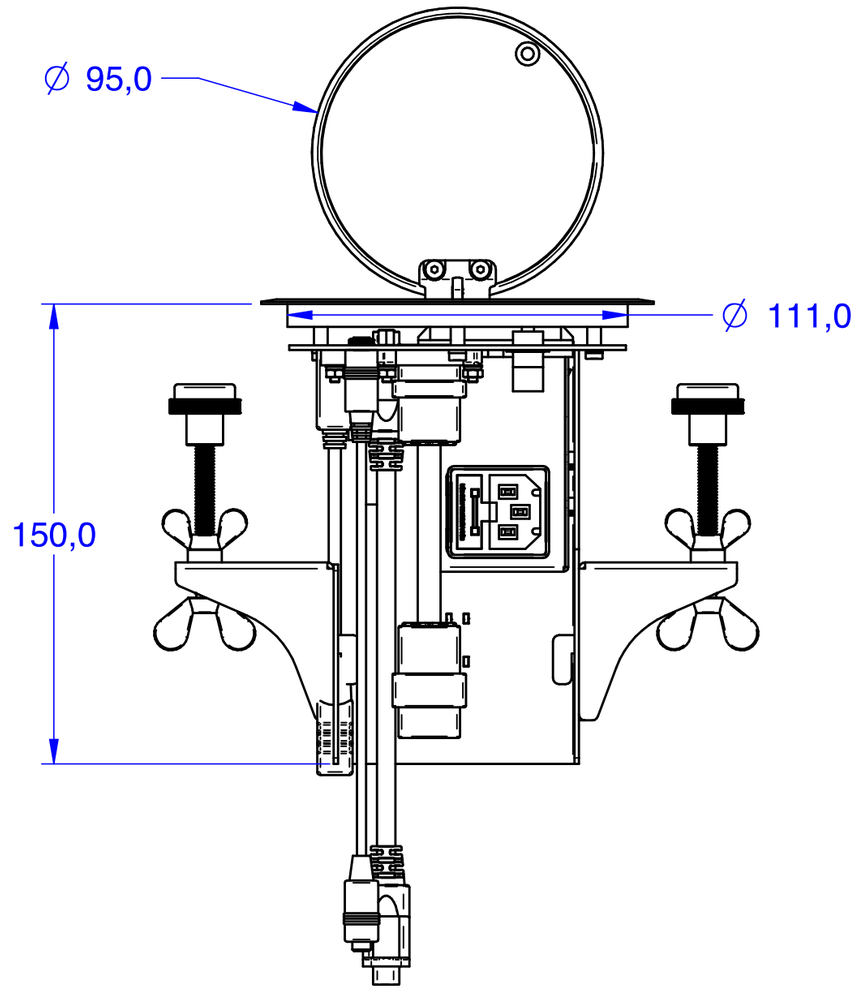

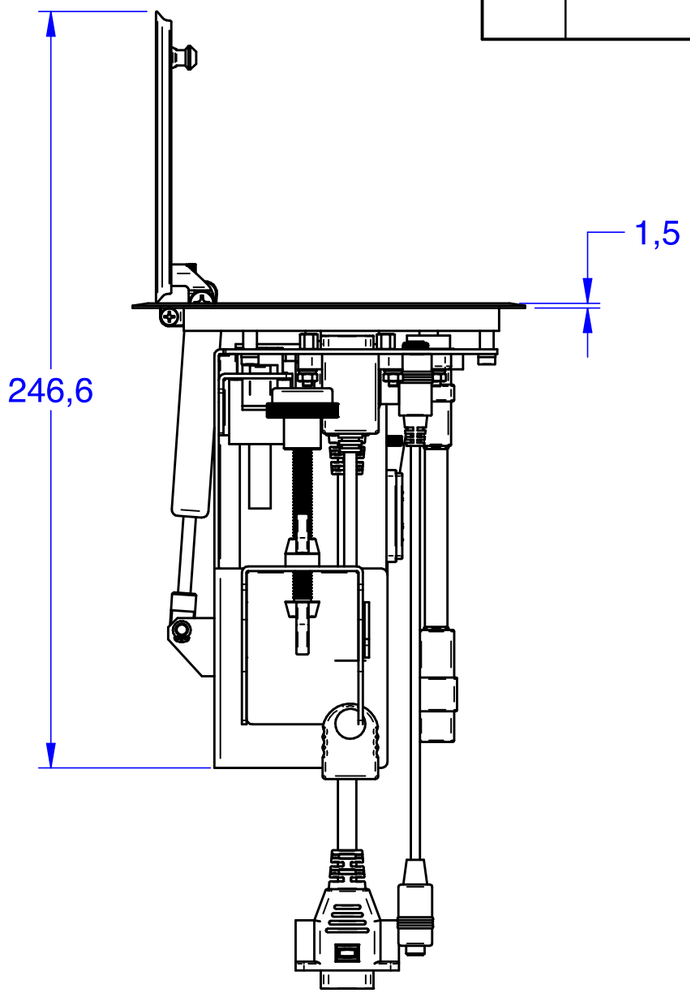

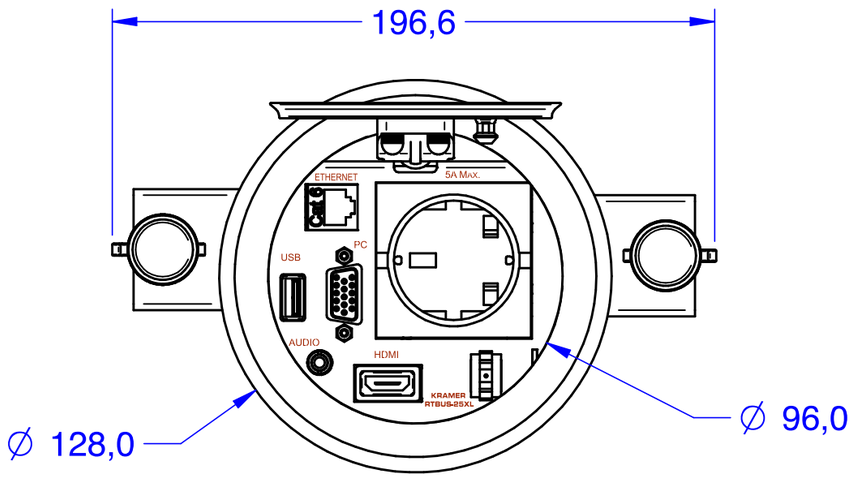

DIMENSIONS IN MILLIMETER

	NAME	DATE	KRAMER ELECTRONICS LTD. JERUSALEM, ISRAEL	
DRAWN	ARKADY	19/03/19		
APPROVED	RADU N.	19/03/19		
Project : RTBUS-25XL			KRAMER DRW.: OL000255	REV. A