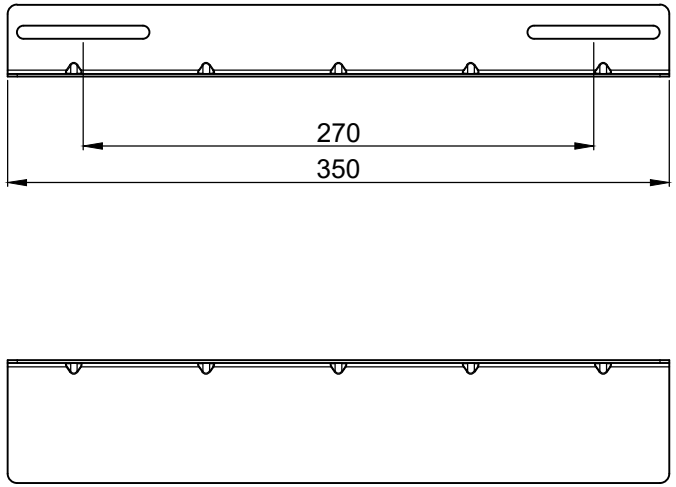

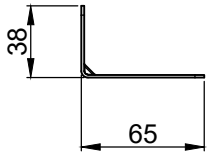

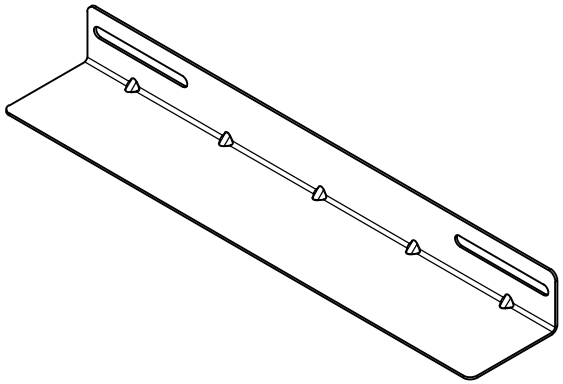

CAYMON professional stands and racks	**SPR60LR**	**Product description:** 19" L-RAIL SET - FOR SPR600 SERIES	
	Weight: 0,74 kg	**Outer dimensions:** (w x h x d) 65 x 38 x 350	**Unit height:** 1 HE