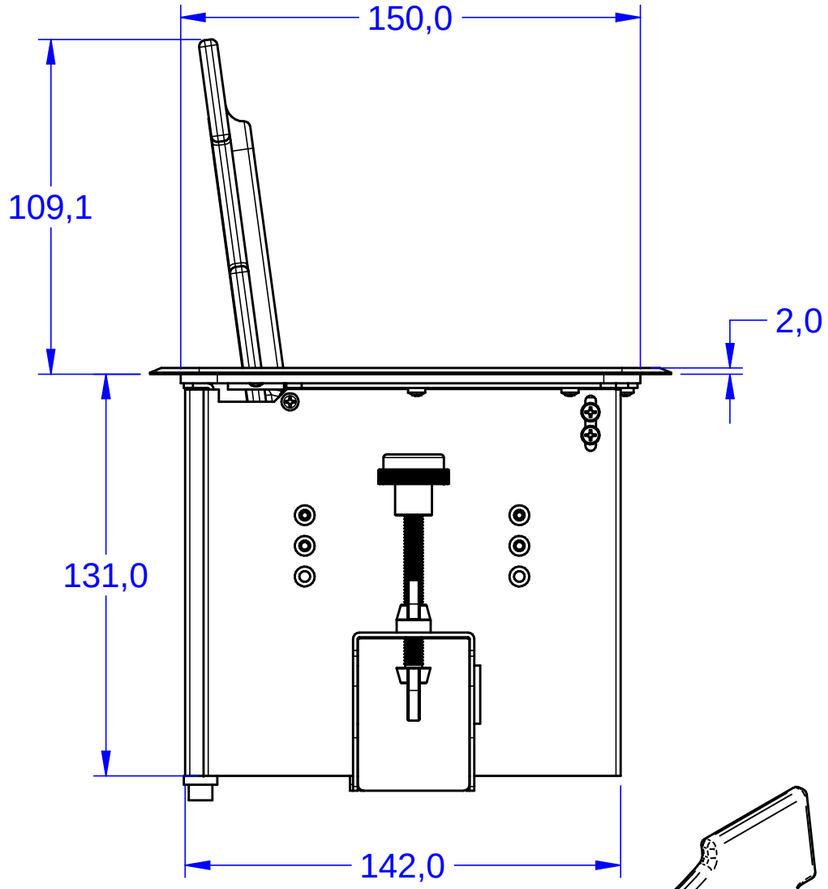
150,0
109,1
2,0
131,0
142,0

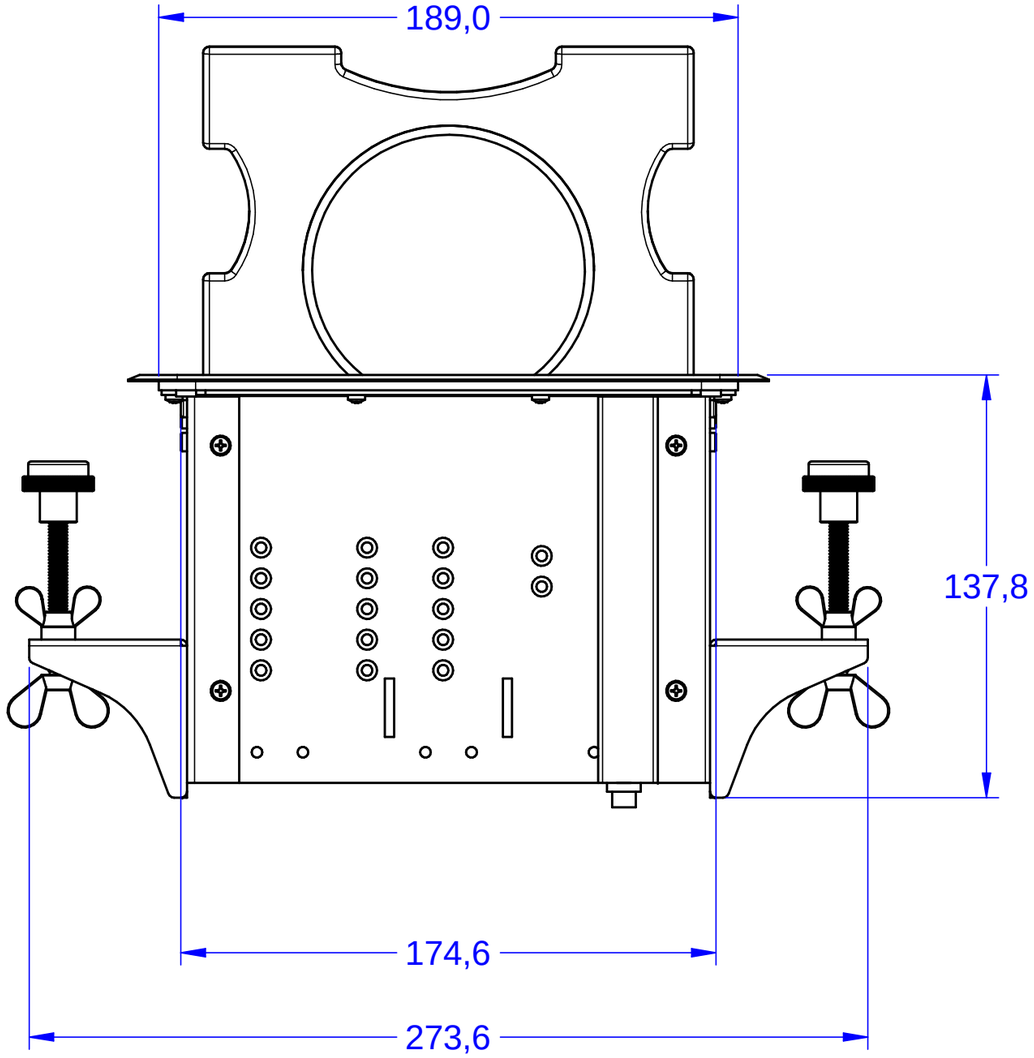
189,0
137,8
174,6
273,6

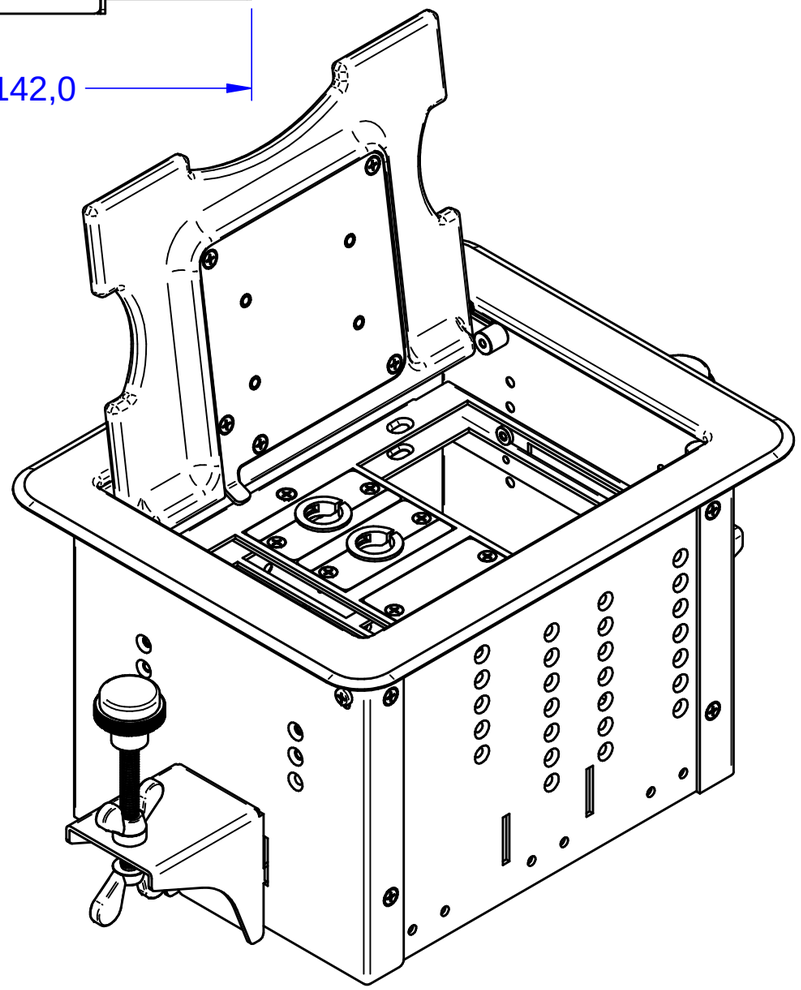

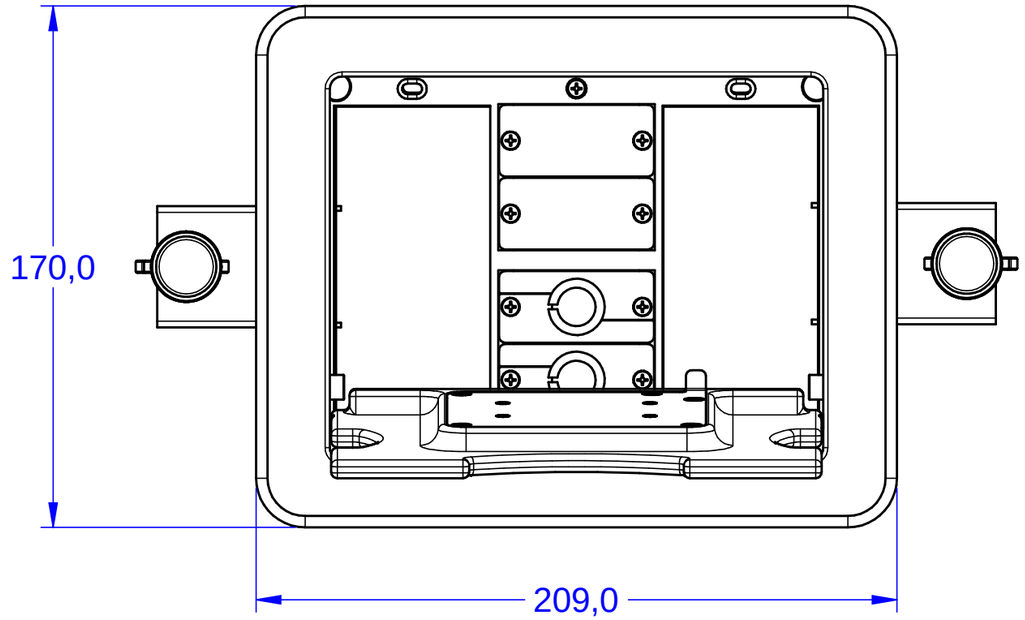
170,0
209,0