REV.	DESCRIPION	ECO NO.	UPDATE BY	DATE	APPROVED
A	DRAWING RELEASE	017205	ARKADY	24/01/21	GLEB

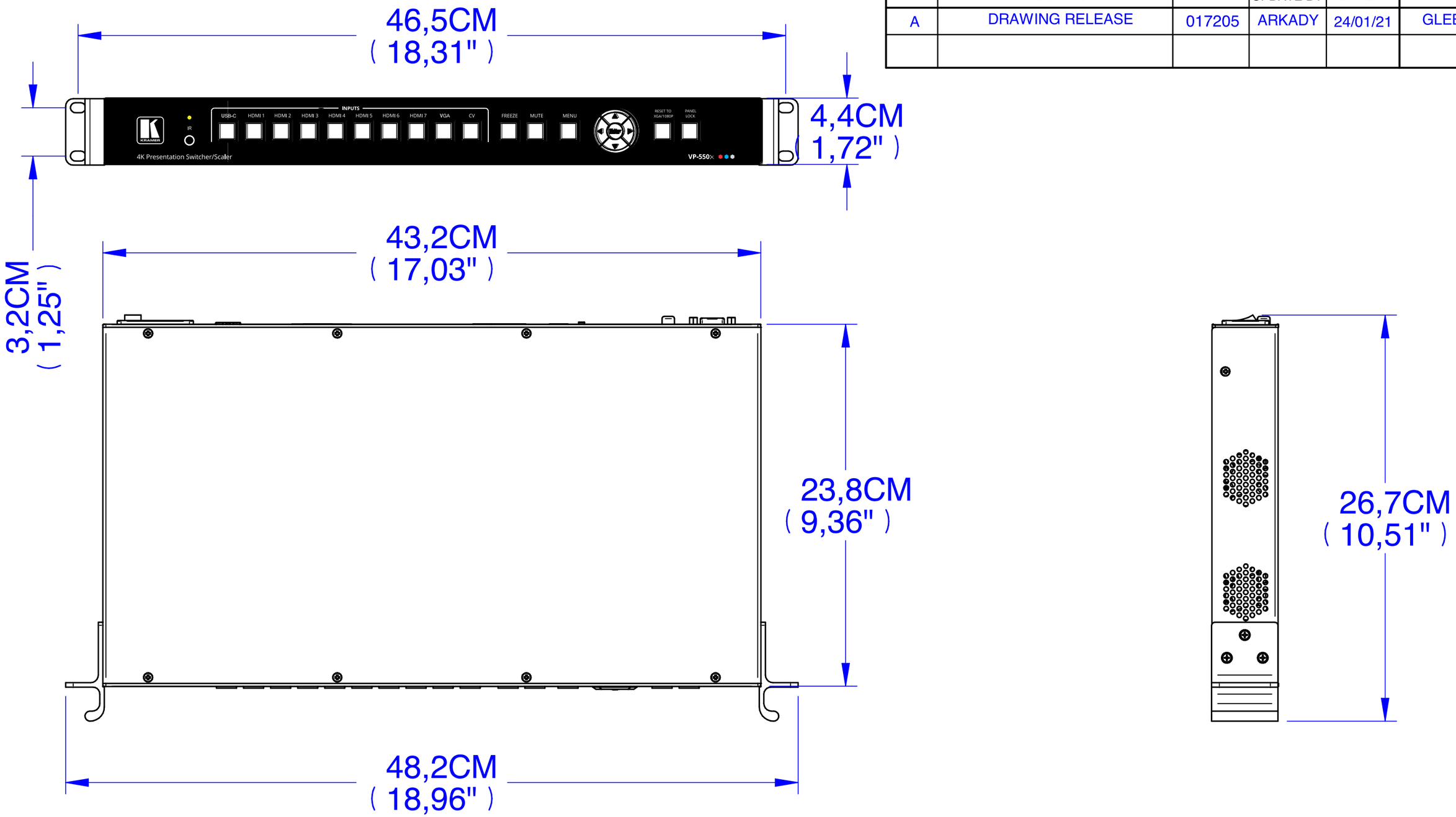

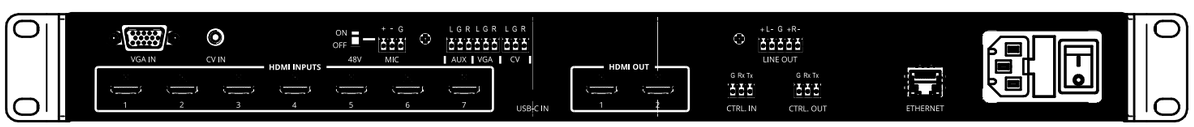

	NAME	DATE
DRAWN	ARKADY	24/01/2021
APPROVED	GLEB D	24/01/2021

KRAMER ELECTRONICS LTD.
JERUSALEM, ISRAEL

SHEET 1 OF 1	Project : VP-550X	SIZE A3	KRAMER DRW.: OL000308	REV. A