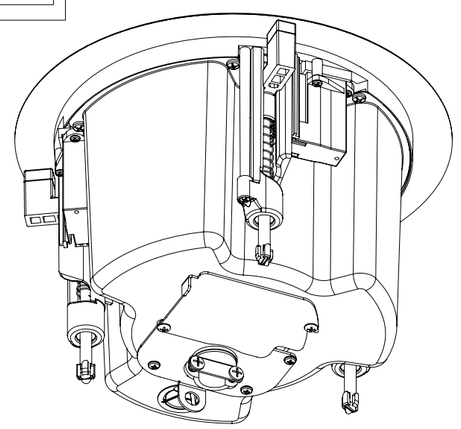

ISOMETRIC VIEW

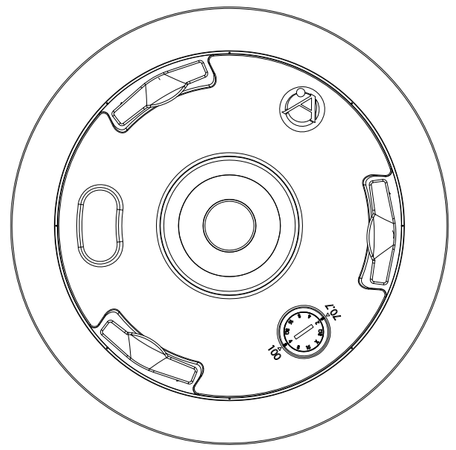

FRONT VIEW
GRILL REMOVED FOR
CLARITY

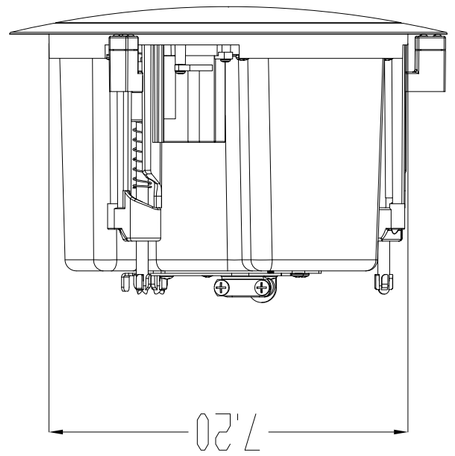

TOP VIEW

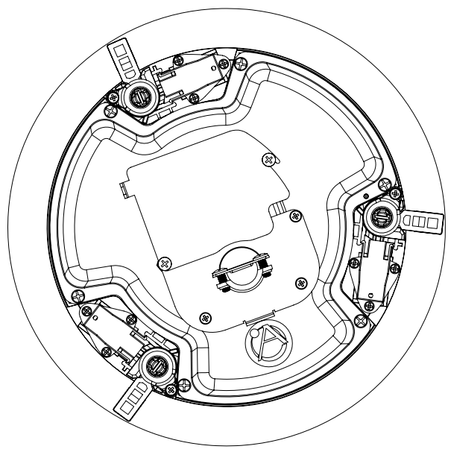

BACK VIEW

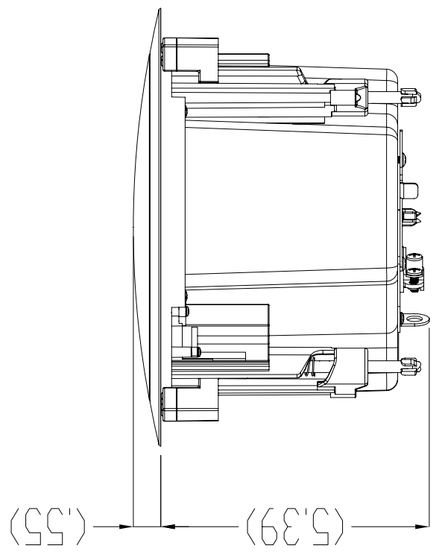

SIDE VIEW

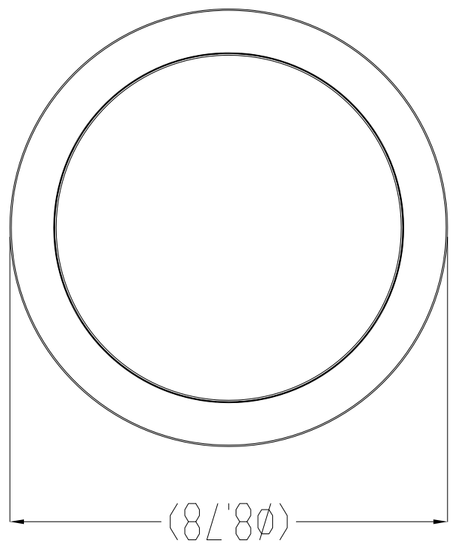

FRONT VIEW

Atlas Sound
A MITEK COMPANY
1601 JACK MckAY BLVD. PH.972-875-8413
www.atlassound.com

PROPRIETARY AND CONFIDENTIAL
THE INFORMATION CONTAINED IN THIS
DRAWING IS THE SOLE PROPERTY OF
MITEKCORP. ANY
REPRODUCTION IN PART OR AS A WHOLE
WITHOUT THE WRITTEN PERMISSION OF
MITEKCORP IS PROHIBITED.

MODEL	REV.	SCALE
FAP33T	A	1:3
		SIZE
		C